SPLIT TYPE
ROOM AIR CONDITIONER
WALL MOUNTED TYPE

FUJITSU

SERVICE MANUAL

Indoor unit	Outdoor unit
ASYG07LMCE	AOYG07LMCE
ASYG09LMCE	AOYG09LMCE

Refrigerant R410A

CONTENTS

FUJITSU GENERAL LIMITED

SPECIFICATIONS

ELECTRICAL DATA

INDOOR UNIT		ASYG07LMCE	ASYG09LMCE
OUTDOOR UNIT		AOYG07LMCE	AOYG09LMCE
POWER SOURCE		230 V 50 Hz	Single phase
Cooling	CAPACITY	2.00 kW	2.50 kW
	POWER CONSUMPTION	0.465 kW	0.65 kW
	EER	4.30 kW/kW	3.85 kW/kW
	RUNNING CURRENT	2.5 A	3.2 A
	MAXIMUM CURRENT	6.0 A	6.0 A
	MOISTURE REMOVAL	1.0 L/h	1.3 L/h
Heating	CAPACITY	3.00 kW	3.20 kW
	POWER CONSUMPTION	0.685 kW	0.73 kW
	COP	4.38 kW/kW	4.38 kW/kW
	RUNNING CURRENT	3.3 A	3.5 A
	MAXIMUM CURRENT	7.5 A	7.5 A

DIMENSIONS

INDOOR UNIT H x W x D	270 x 870 x 204 mm
OUTDOOR UNIT H x W x D	535 x 663 x 293 mm

WEIGHT

INDOOR UNIT Net / Shipping	8.5 kg / 11 kg
OUTDOOR UNIT Net / Shipping	21 kg / 25 kg

FAN MOTOR AND FAN REVOLUTION

INDOOR UNIT'S Discrimination		MFD-12CYBL
OUTDOOR UNIT'S Discrimination		MFE-22AVAL
INDOOR UNIT Cooling	High	1,320 rpm
	Medium	1,160 rpm
	Low	930 rpm
	Quiet	680 rpm
INDOOR UNIT Heating	High	1,320 rpm
	Medium	1,160 rpm
	Low	980 rpm
	Quiet	710 rpm
OUTDOOR UNIT	Cooling	730 rpm
	Heating	650 rpm

AIRFLOW

INDOOR UNIT Cooling	High	750 m^3/h
	Medium	640 m^3/h
	Low	480 m^3/h
	Quiet	310 m^3/h
INDOOR UNIT Heating	High	750 m^3/h
	Medium	640 m^3/h
	Low	520 m^3/h
	Quiet	330 m^3/h
OUTDOOR UNIT	Cooling	1,670 m^3/h
	Heating	1,470 m^3/h

NOISE LEVEL

INDOOR UNIT Cooling	High	43 dB
	Medium	40 dB
	Low	32 dB
	Quiet	21 dB
INDOOR UNIT Heating	High	43 dB
	Medium	38 dB
	Low	33 dB
	Quiet	22 dB
OUTDOOR UNIT	Cooling	45 dB
	Heating	45 dB

COMPRESSOR AND REFRIGERANT

COMPRESSOR TYPE		Hermetic type, 4 pole, 3 phase, DC inverter motor, Rotary
DISCRIMINATION		5SS072XHA01
WEIGHT (with oil)		6.0 kg
PRECHARGED REFRIGERANT		700 g
REFRIGERANT TYPE		R410A
FULL CHARGE	Pipe length 15 m	700 g
	20 m	800 g
ADDITIONAL CHARGE		20 g/m
MAXIMUM PIPING HEIGHT		15 m

DIMENSIONS

INDOOR UNIT

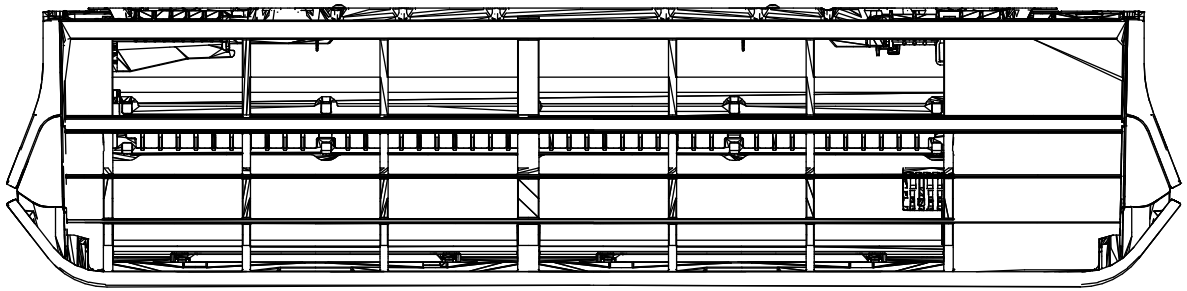

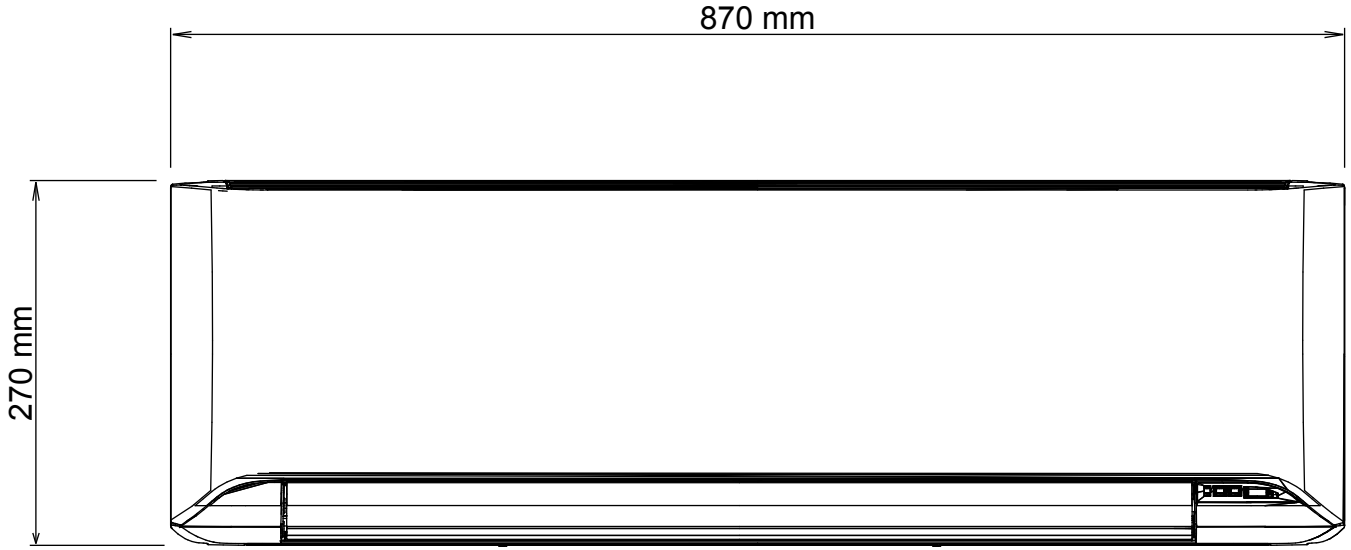

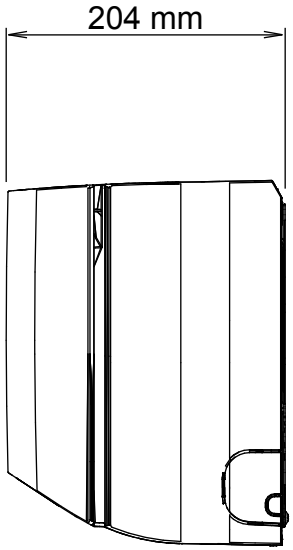

Drain hose

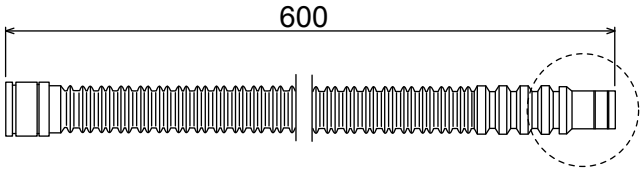

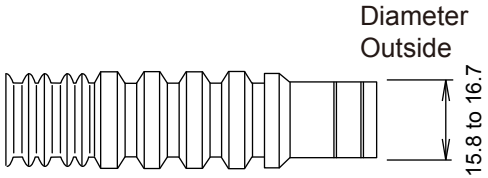

Inside : 13.8 mm

OUTDOOR UNIT

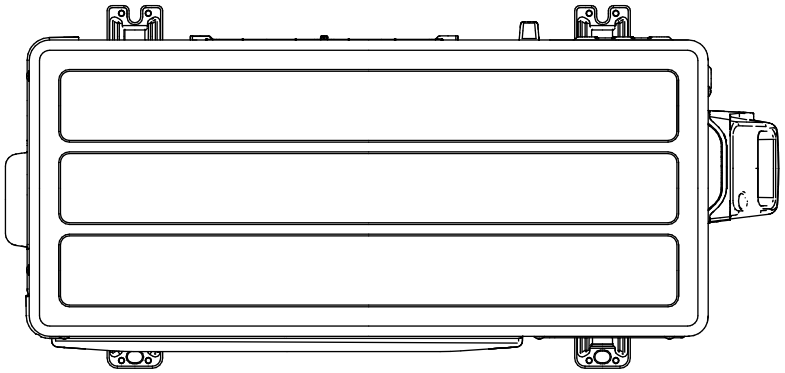

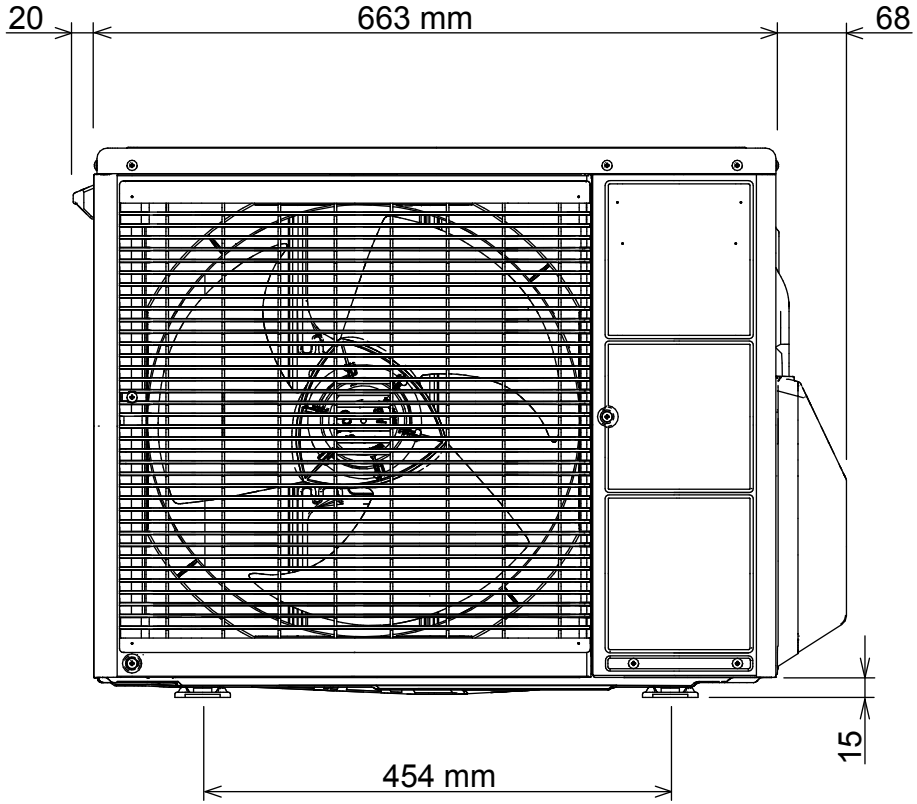

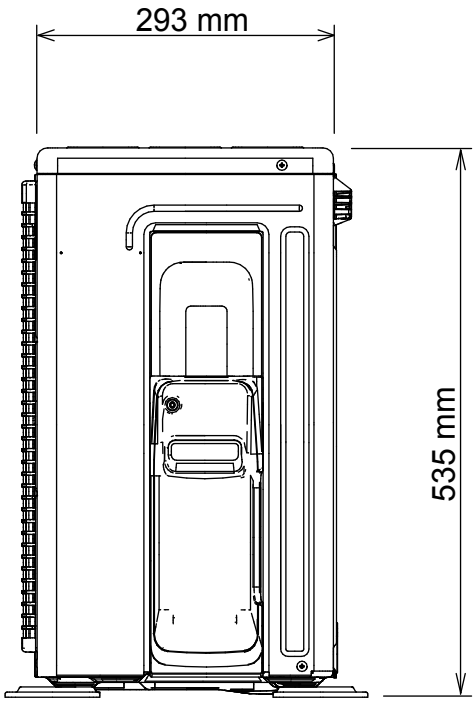

REFRIGERANT SYSTEM DIAGRAM

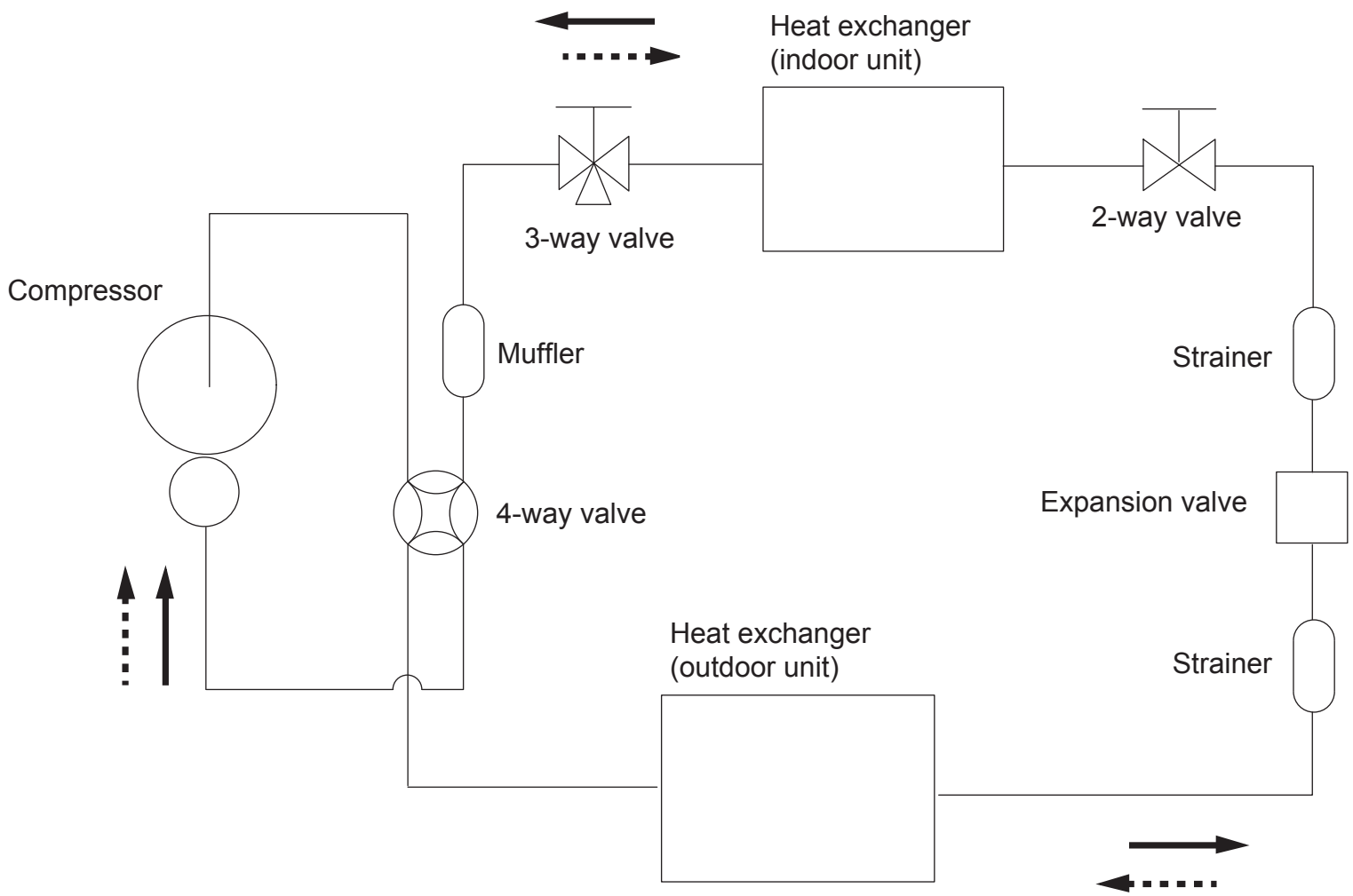

Refrigerant direction

Cooling

Heating

Refrigerant pipe diameter

Liquid : 1/4" (6.35 mm)

Gas : 3/8" (9.52 mm)

CIRCUIT DIAGRAM

Models : ASYG07LMCE / AOYG07LMCE
ASYG09LMCE / AOYG09LMCE

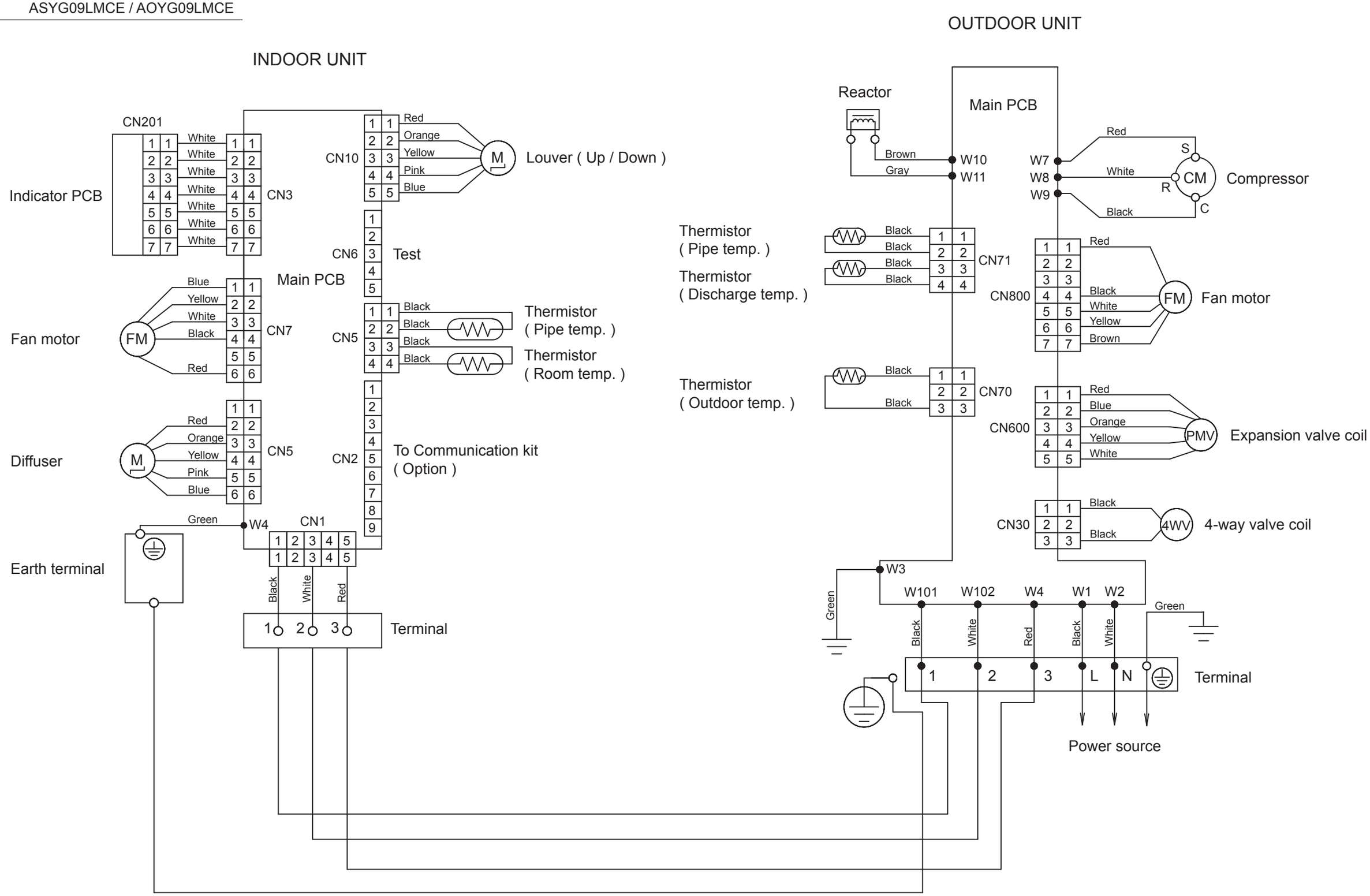

PCB CIRCUIT DIAGRAM

CONTROL UNIT
ASYG07LMCE : EZ-0124CHSE
ASYG09LMCE : EZ-0120MHSE

CN7 DC Fan motor

Pin No.	Terminal code	Function of terminal	Lead wire color
6	Vm	Motor power voltage input	Red
5	——	——	——
4	GND	GND	Black
3	Vcc	Control power voltage input	White
2	Vsp	Speed control voltage input	Yellow
1	PG	Revolution pulse output	Blue

CN4 Thermistor Characteristics.

Thermistor \ Temperature	(0℃)	(20℃)	(30℃)
Thermistor (Pipe temp.)	176.0 k Ω 1.1 V	62.9 k Ω 2.2 V	39.6 k Ω 2.8 V
Thermistor (Room temp.)	33.6 k Ω 1.1 V	12.5 k Ω 2.2 V	8.0 k Ω 2.8 V

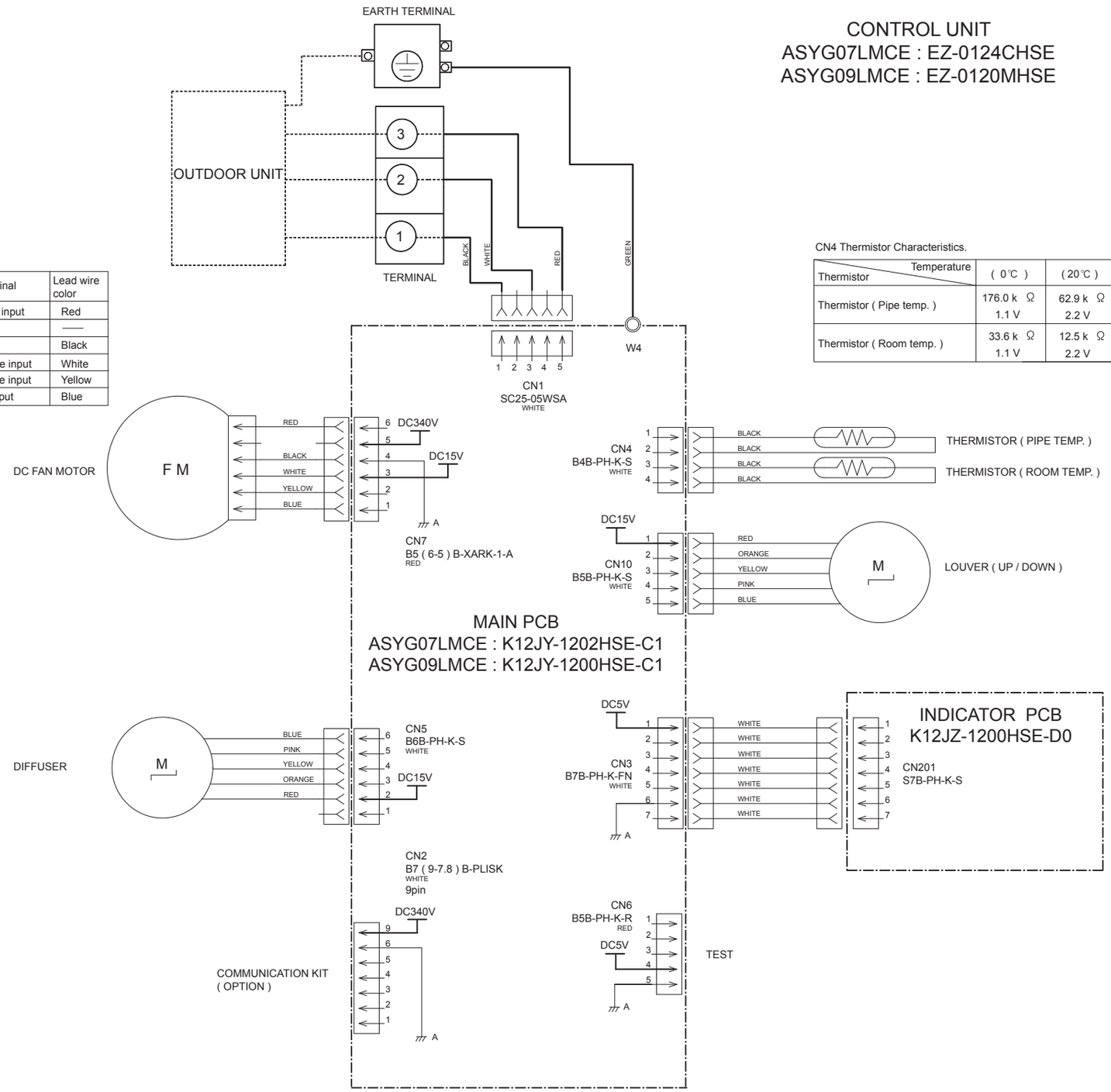

I NVERTER ASSEMBLY
AOYG07LMCE : EZ-0122CHUE
AOYG09LMCE : EZ-012PHUE

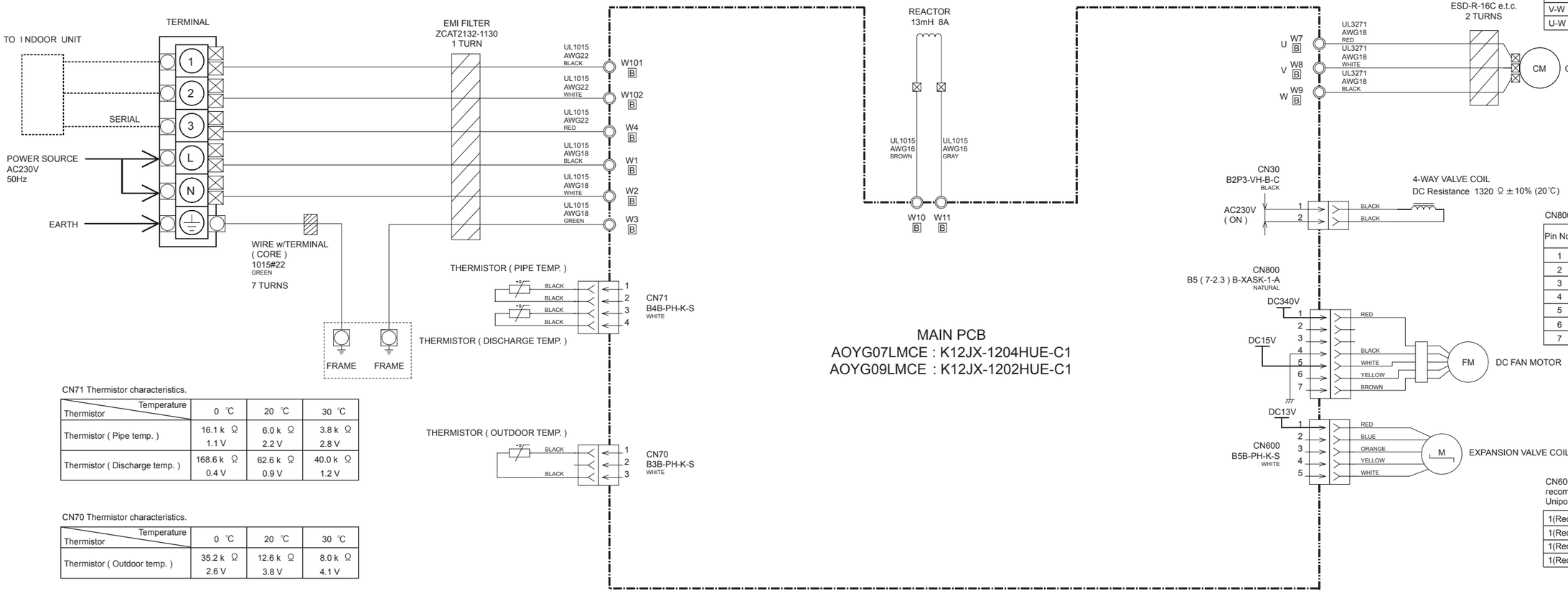

Compressor
Winding resistance (07,09 Type)

U-V	3.268 Ω (20℃)
V-W	3.220 Ω (20℃)
U-W	3.296 Ω (20℃)

Compressor
Winding resistance (12 Type)

U-V	1.30 Ω (20℃)
V-W	
U-W	

CN800 DC Fan motor

Pin No.	Terminal code	Function of terminal	Lead wire color
1	Vm	Motor power voltage input	Red
2	——	——	——
3	——	——	——
4	GND	GND	Black
5	Vcc	Control power voltage input	White
6	Vsp	Speed control voltage input	Yellow
7	FG	Revolution pulse output	Brown

CN600 Expansion valve coil
recommended drive condition
Unipolar drive, 1-2 phase excitation.

1(Red) - 2(Blue)	Coil resistance ≒46.0Ω (20℃)
1(Red) - 3(Orange)	
1(Red) - 4(Yellow)	
1(Red) - 5(White)	

CN71 Thermistor characteristics.

Thermistor \ Temperature	0 ℃	20 ℃	30 ℃
Thermistor (Pipe temp.)	16.1 k Ω 1.1 V	6.0 k Ω 2.2 V	3.8 k Ω 2.8 V
Thermistor (Discharge temp.)	168.6 k Ω 0.4 V	62.6 k Ω 0.9 V	40.0 k Ω 1.2 V

CN70 Thermistor characteristics.

Thermistor \ Temperature	0 ℃	20 ℃	30 ℃
Thermistor (Outdoor temp.)	35.2 k Ω 2.6 V	12.6 k Ω 3.8 V	8.0 k Ω 4.1 V

ERROR DETECTION

If you use a wireless remote control,
the lamp on the photo detector unit will output error codes by way of blinking patterns.
If you use a wired remote control,
error codes will appear on the remote control display.
See the lamp blinking patterns and error codes in the table.
An error display is displayed only during operation.

Troubleshooting with the indoor unit display

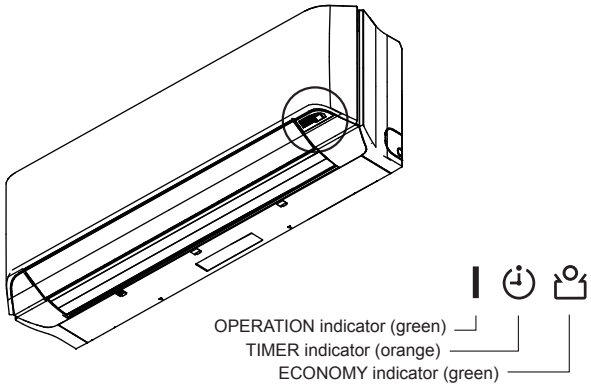

Troubleshooting with the Wired Remote Control Display (Option)

If an error occurs, the following display will be shown.
("Er" will appear in the set room temperature display.)

Error display			Wired remote controller Error code	Description
OPERATION lamp (green)	TIMER lamp (orange)	ECONOMY lamp (green)		
●(1)	●(1)	◇	11	Serial communication error
●(1)	●(2)	◇	12	Wired remote controller communication error
●(1)	●(5)	◇	15	Check run unfinished
●(2)	●(1)	◇	21	Unit number or Refrigerant circuit address setting error [Simultaneous Multi]
●(2)	●(2)	◇	22	Indoor unit capacity error
●(2)	●(3)	◇	23	Combination error
●(2)	●(4)	◇	24	• Connection unit number error (indoor slave unit) [Simultaneous Multi] • Connection unit number error (indoor unit or branch unit) [Flexible Multi]
●(2)	●(7)	◇	27	Master unit, slave unit set-up error [Simultaneous Multi]
●(3)	●(2)	◇	32	Indoor unit PCB model information error
●(3)	●(5)	◇	35	Manual auto switch error
●(4)	●(1)	◇	41	Room temp. sensor error
●(4)	●(2)	◇	42	Indoor unit Heat Ex. Middle temp. sensor error
●(5)	●(1)	◇	51	Indoor unit fan motor error
●(5)	●(3)	◇	53	Drain pump error
●(5)	●(7)	◇	57	Damper error
●(5)	●(8)	◇	58	Intake grille error
●(5)	●(15)	◇	5U	Indoor unit error
●(6)	●(2)	◇	62	Outdoor unit main PCB model information error or communication error
●(6)	●(3)	◇	63	Inverter error
●(6)	●(4)	◇	64	Active filter error, PFC circuit error
●(6)	●(5)	◇	65	Trip terminal L error
●(6)	●(10)	◇	6A	Display PCB microcomputers communication error
●(7)	●(1)	◇	71	Discharge temp. sensor error
●(7)	●(2)	◇	72	Compressor temp. sensor error
●(7)	●(3)	◇	73	Outdoor unit Heat Ex. liquid temp. sensor error
●(7)	●(4)	◇	74	Outdoor temp. sensor error
●(7)	●(5)	◇	75	Suction Gas temp. sensor error
●(7)	●(6)	◇	76	• 2-way valve temp. sensor error • 3-way valve temp. sensor error
●(7)	●(7)	◇	77	Heat sink temp. sensor error
●(8)	●(2)	◇	82	• Sub-cool Heat Ex. gas inlet temp. sensor error • Sub-cool Heat Ex. gas outlet temp. sensor error
●(8)	●(3)	◇	83	Liquid pipe temp. sensor error
●(8)	●(4)	◇	84	Current sensor error
●(8)	●(6)	◇	86	• Discharge pressure sensor error • Suction pressure sensor error • High pressure switch error
●(9)	●(4)	◇	94	Trip detection
●(9)	●(5)	◇	95	Compressor rotor position detection error
●(9)	●(7)	◇	97	Outdoor unit fan motor error
●(9)	●(9)	◇	99	4-way valve error
●(10)	●(1)	◇	A1	Discharge temp. error
●(10)	●(3)	◇	A3	Compressor temp. error
●(10)	●(4)	◇	A4	High pressure error
●(10)	●(5)	◇	A5	Low pressure error
●(13)	●(2)	◇	J2	Branch boxes error [Flexible Multi]

Display mode ● : 0.5s ON / 0.5s OFF
◇ : 0.1s ON / 0.1s OFF
( ) : Number of flashing

PARTS

INDOOR UNIT
ASYG07LMCE
ASYG09LMCE

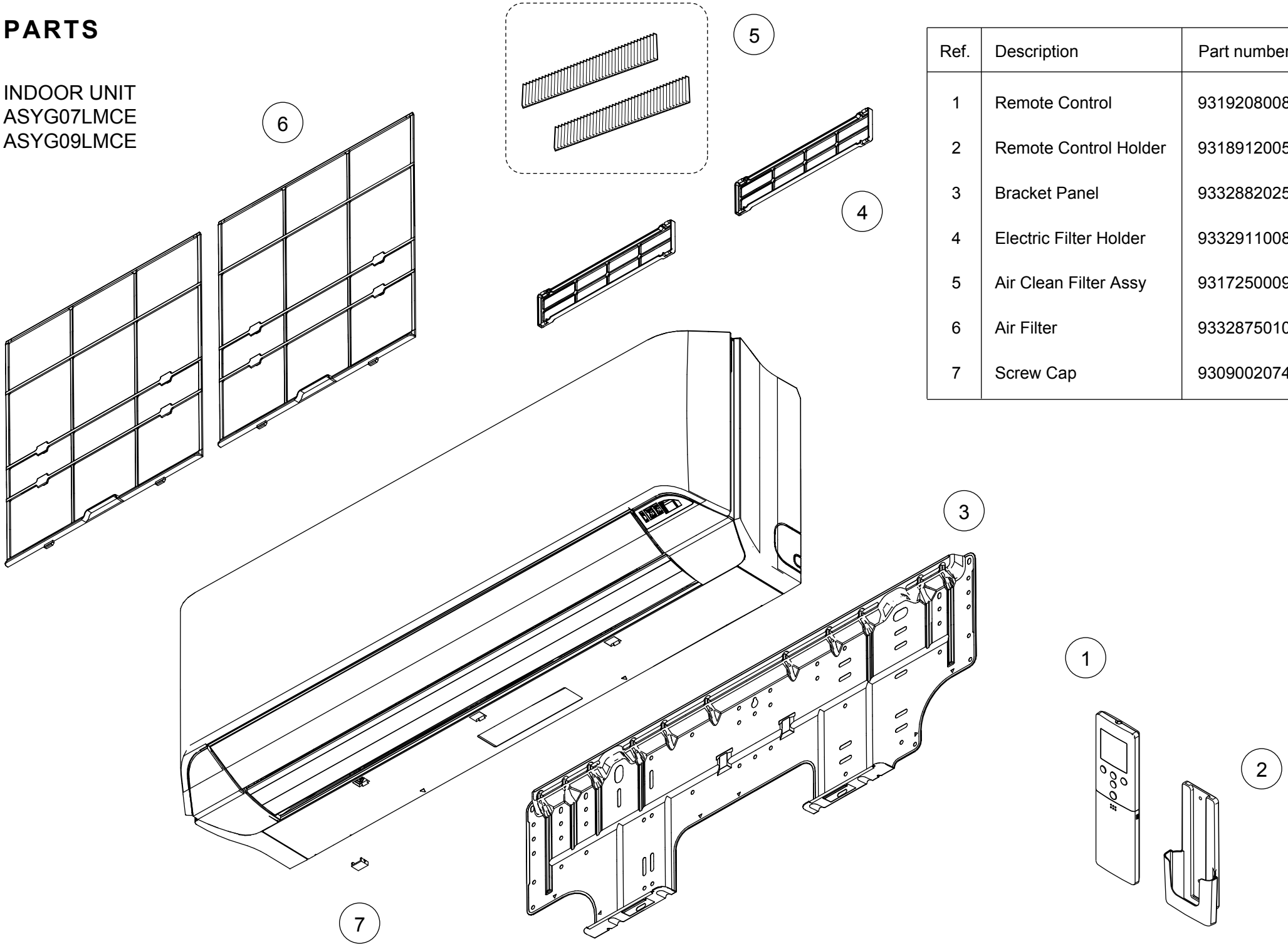

Ref.	Description	Part number	
1	Remote Control	9319208008	
2	Remote Control Holder	9318912005	
3	Bracket Panel	9332882025	
4	Electric Filter Holder	9332911008	
5	Air Clean Filter Assy	9317250009	
6	Air Filter	9332875010	
7	Screw Cap	9309002074	

INDOOR UNIT
ASYG07LMCE
ASYG09LMCE

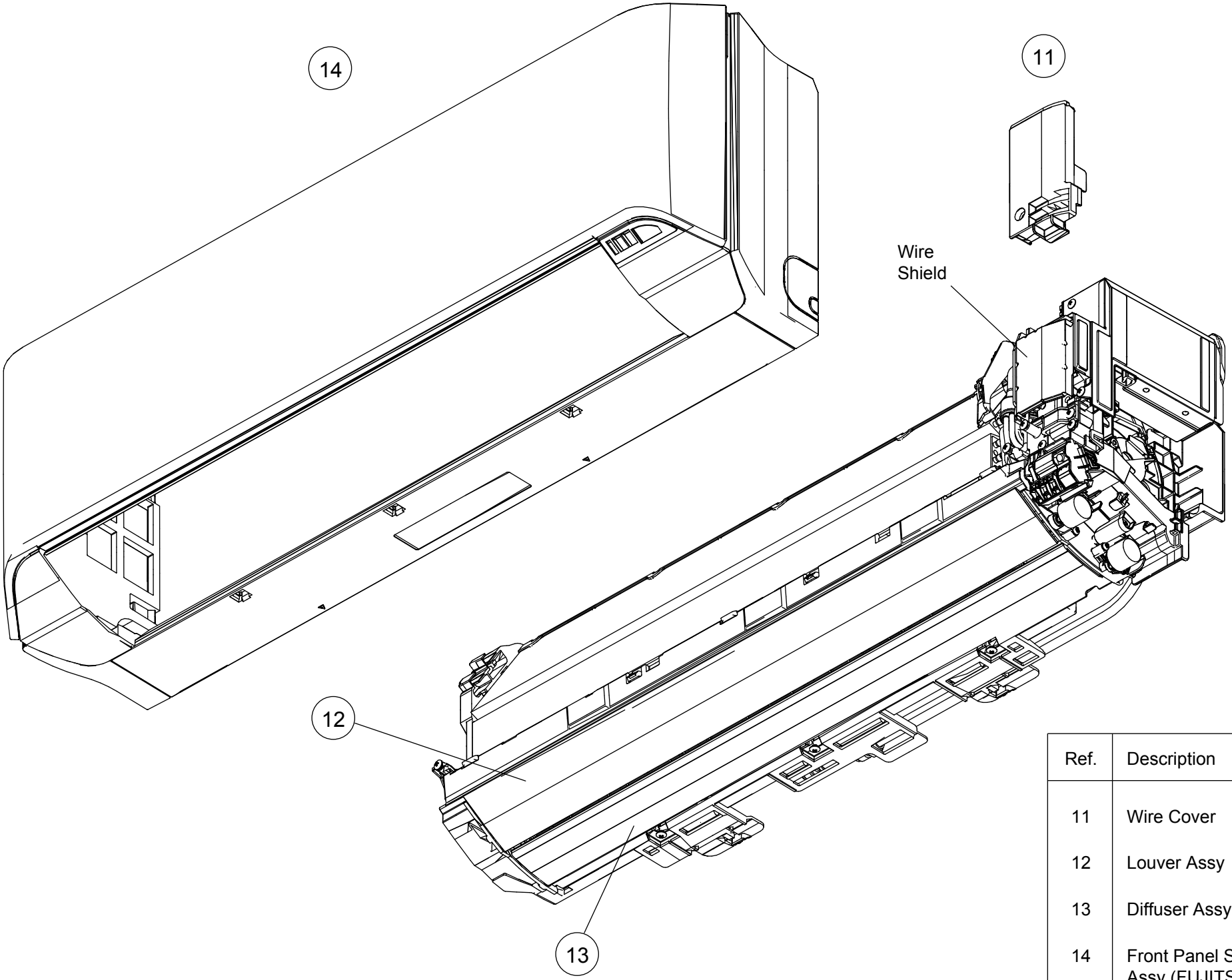

Ref.	Description	Part number	
11	Wire Cover	9333504018	
12	Louver Assy	9333353043	
13	Diffuser Assy	9332998085	
14	Front Panel Sub Assy (FUJITSU)	9333525051	

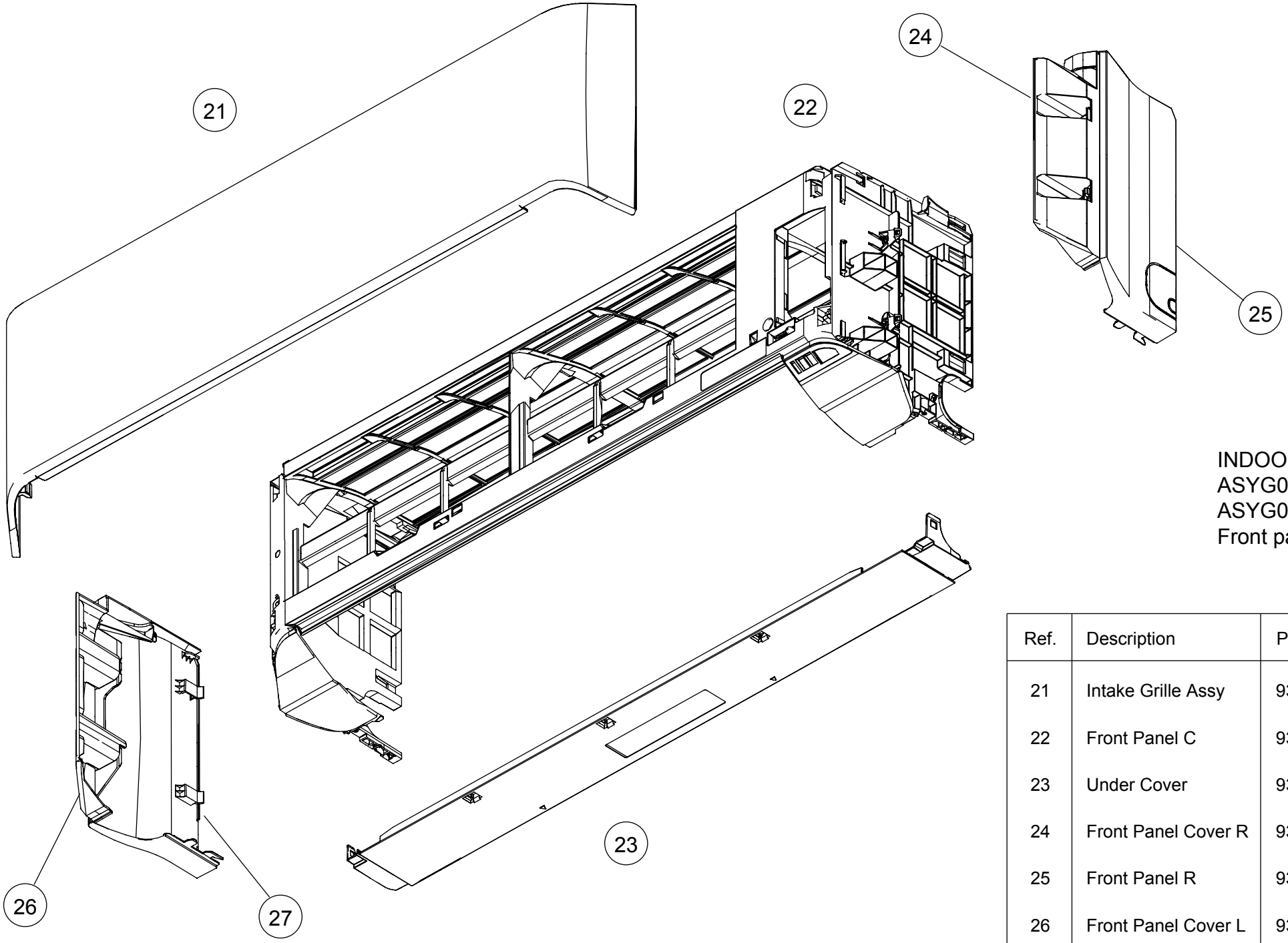

INDOOR UNIT
ASYG07LMCE
ASYG09LMCE
Front panel sub assy

Ref.	Description	Part number	
21	Intake Grille Assy	9333526010	
22	Front Panel C	9333497020	
23	Under Cover	9333503011	
24	Front Panel Cover R	9333502014	
25	Front Panel R	9333500003	
26	Front Panel Cover L	9333501017	
27	Front Panel L	9333499000	

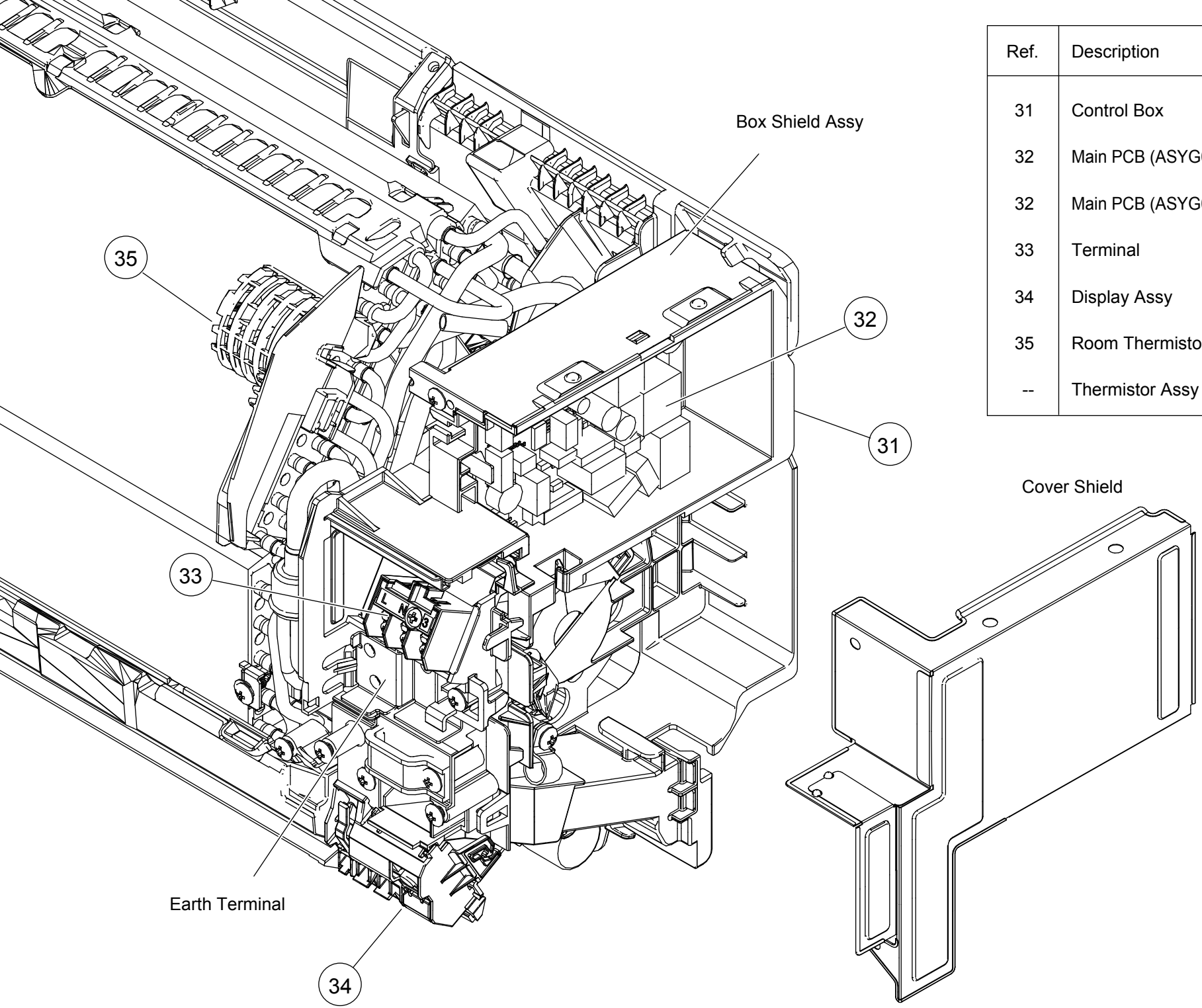

Ref.	Description	Part number	
31	Control Box	9332892000	
32	Main PCB (ASYG07LMCE)	9709427033	
32	Main PCB (ASYG09LMCE)	9709427019	
33	Terminal	9900720001	
34	Display Assy	9709430019	
35	Room Thermistor Holder	9332868005	
--	Thermistor Assy	9900930011	

INDOOR UNIT
ASYG07LMCE
ASYG09LMCE
Control box

INDOOR UNIT
ASYG07LMCE
ASYG09LMCE
Evaporator
Fan

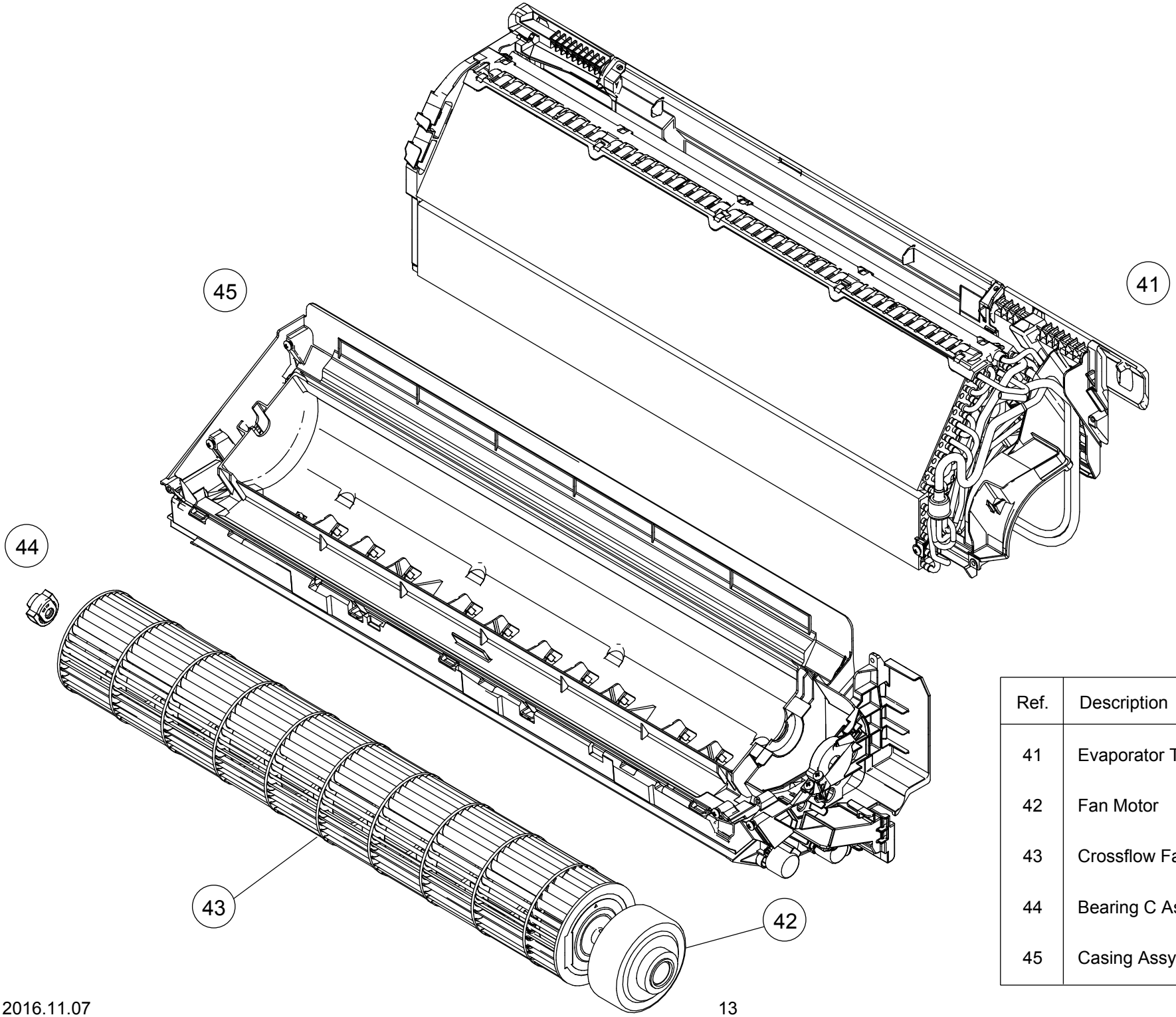

Ref.	Description	Part number	
41	Evaporator Total Assy	9332989090	
42	Fan Motor	9603269005	
43	Crossflow Fan Assy	9316830004	
44	Bearing C Assy	9306628017	
45	Casing Assy	9333009001	

INDOOR UNIT
ASYG07LMCE
ASYG09LMCE
Casing assy

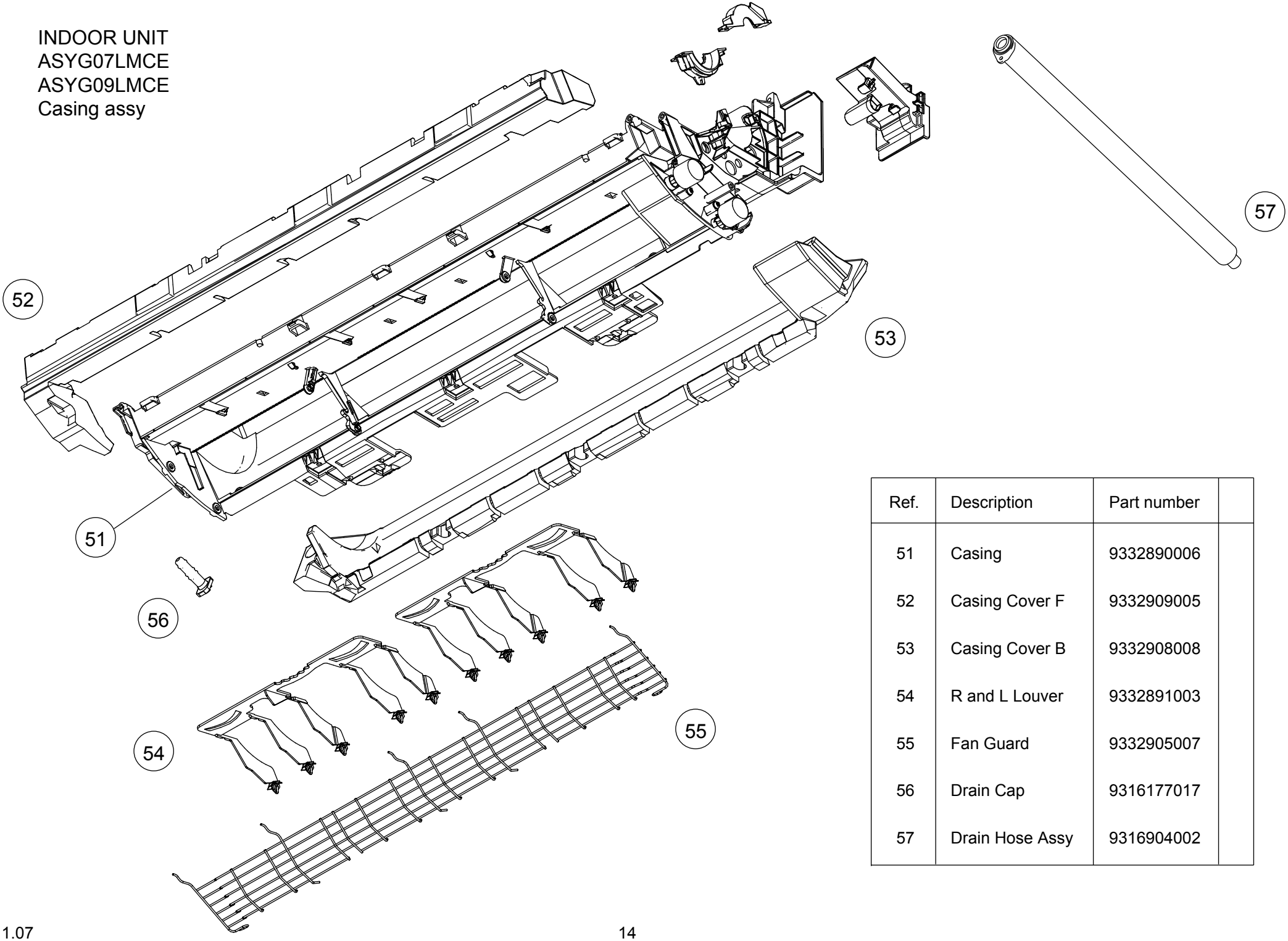

Ref.	Description	Part number	
51	Casing	9332890006	
52	Casing Cover F	9332909005	
53	Casing Cover B	9332908008	
54	R and L Louver	9332891003	
55	Fan Guard	9332905007	
56	Drain Cap	9316177017	
57	Drain Hose Assy	9316904002	

INDOOR UNIT
ASYG07LMCE
ASYG09LMCE
Casing assy

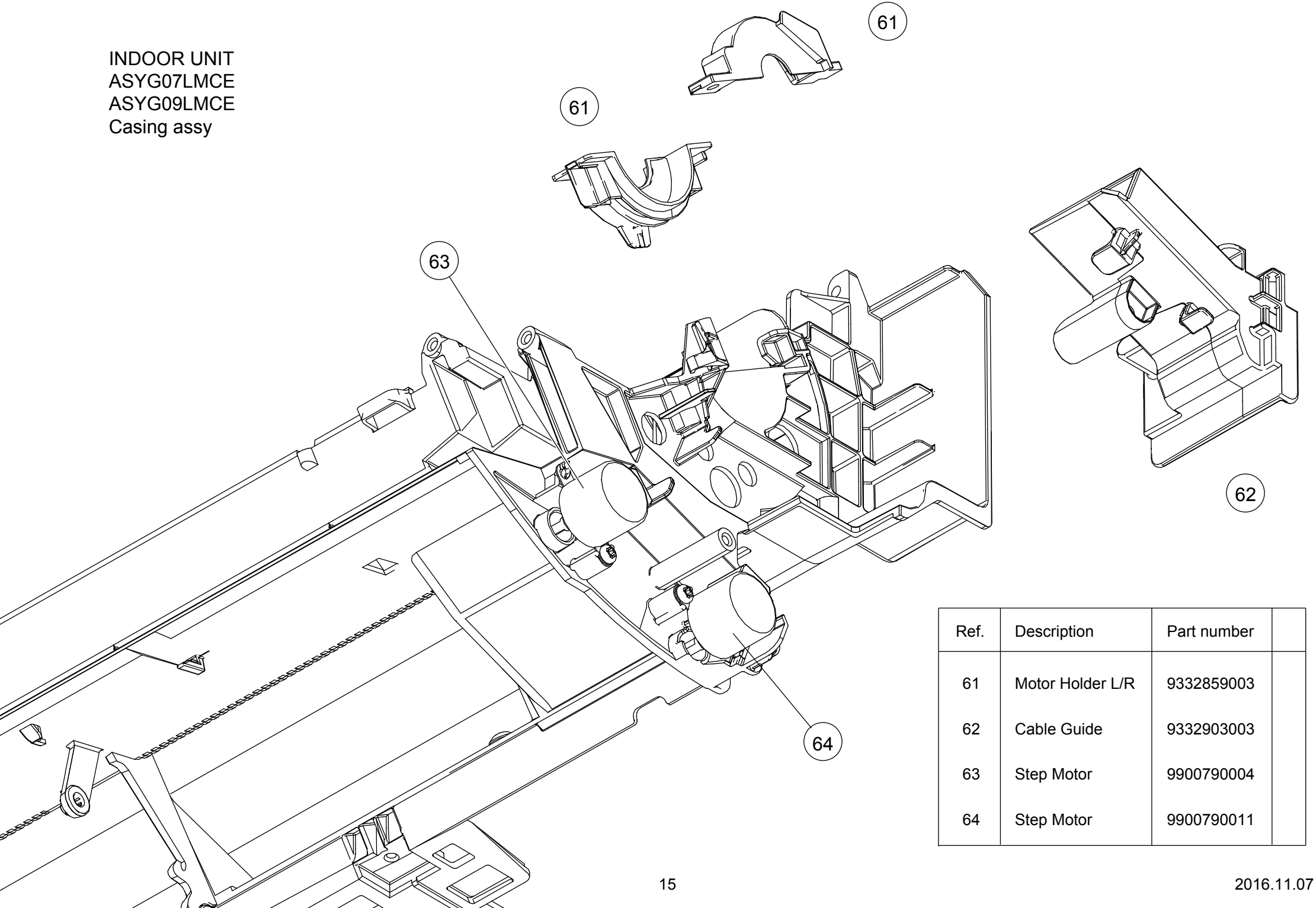

Ref.	Description	Part number	
61	Motor Holder L/R	9332859003	
62	Cable Guide	9332903003	
63	Step Motor	9900790004	
64	Step Motor	9900790011	

PARTS

OUTDOOR UNIT
AOYG07LMCE
AOYG09LMCE

Ref.	Description	Part number	
1	Protective Net	9332855005	
2	Thermistor Holder	9332505009	
3	Top Panel Assy	9332977004	
4	Front Panel Assy	9332965001	
5	Cabinet Left Assy	9332962000	
6	Emblem	9319151007	
7	Cabinet Right Assy	9332963007	
8	Switch Cover A Assy	9332964011	
9	Switch Cover B	9332843002	
10	Fan Motor	9603074012	
11	Propeller Fan	9309909014	
12	Drain Assy	9332574005	

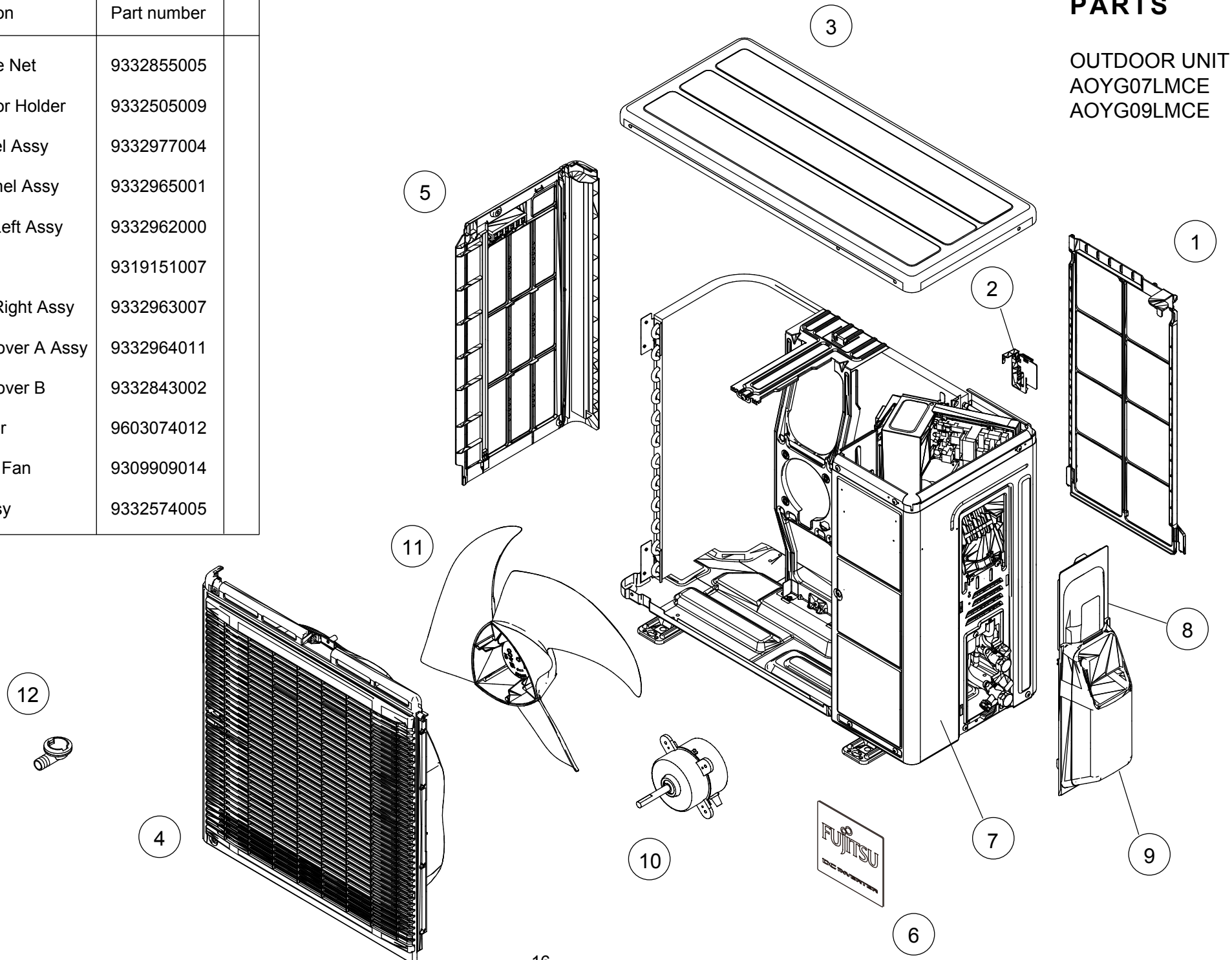

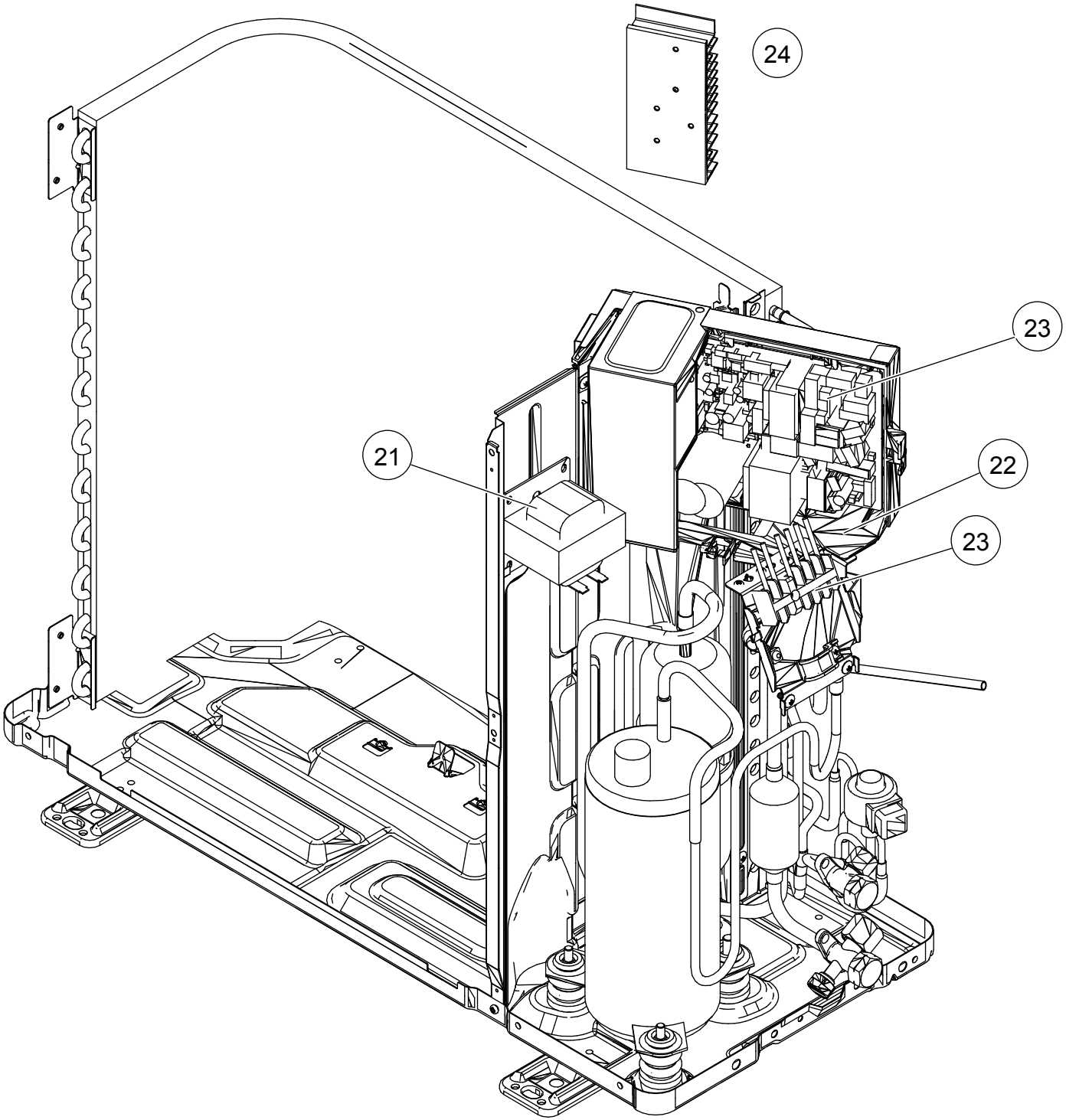

OUTDOOR UNIT
AOYG07LMCE
AOYG09LMCE

Ref.	Description	Part number	
21	Reactor Assy (AOYG07LMCE)	9900872014	
21	Reactor Assy (AOYG09LMCE)	9900787028	
22	PCB Holder	9332506013	
23	Main PCB with Terminal (07)	9709434147	
23	Main PCB with Terminal (09)	9709434031	
24	Heat Sink B	9332522006	
--	Thermistor Assy	9900901011	
--	Thermistor	9900880019	

OUTDOOR UNIT
AOYG07LMCE
AOYG09LMCE

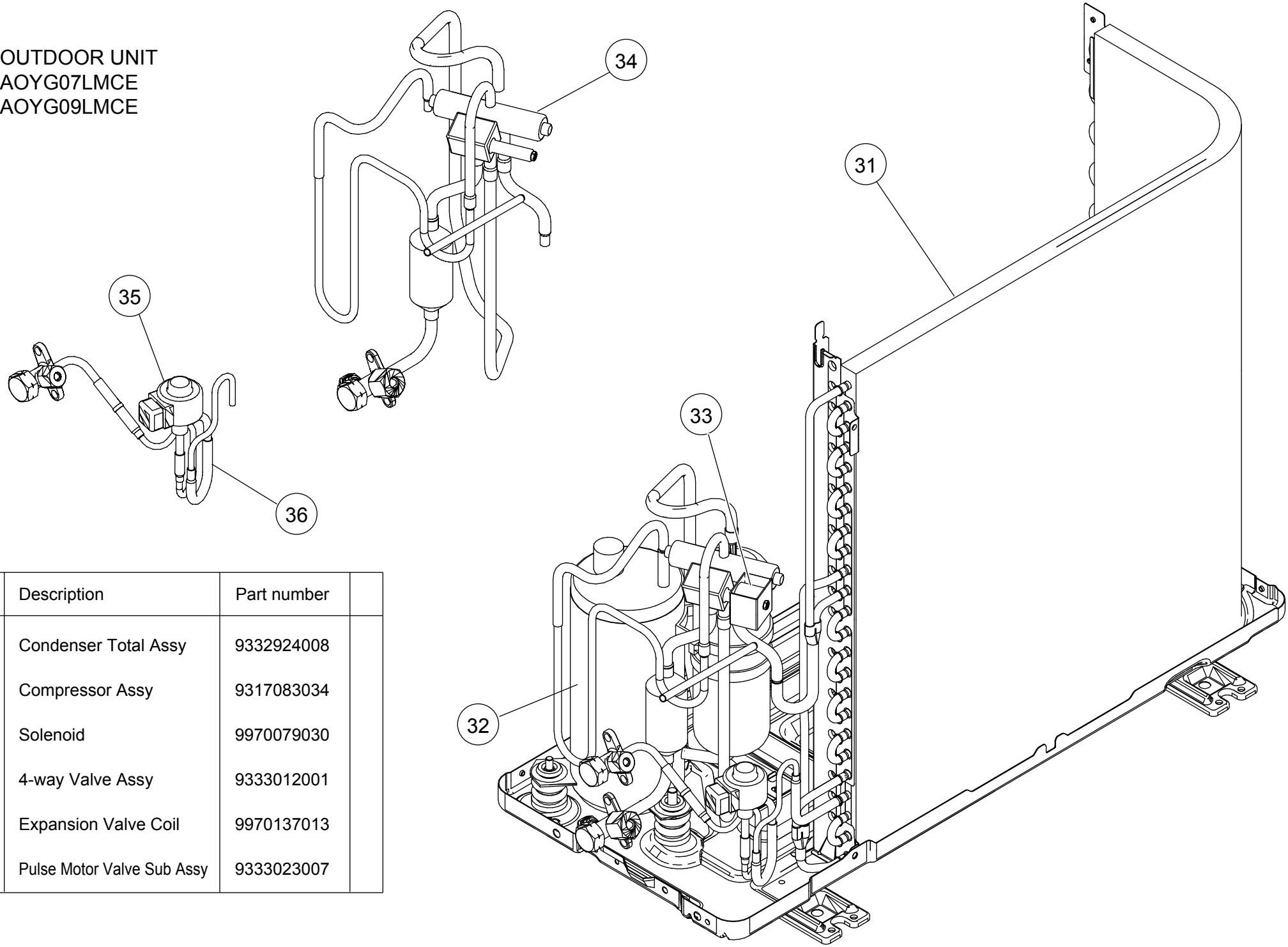

Ref.	Description	Part number	
31	Condenser Total Assy	9332924008	
32	Compressor Assy	9317083034	
33	Solenoid	9970079030	
34	4-way Valve Assy	9333012001	
35	Expansion Valve Coil	9970137013	
36	Pulse Motor Valve Sub Assy	9333023007	

ACCESSORIES

INDOOR UNIT

Name and Shape	Part number
Bracket Panel 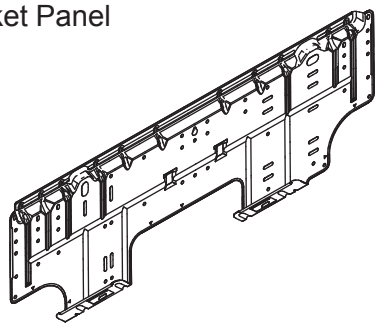	9332882025
Remote Control 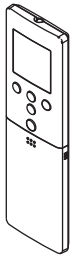	9319208008
Remote Control Holder 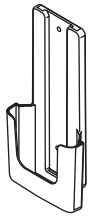	9318912005
Battery (penlight) 	0600185541

Name and Shape	Part number
Cloth tape 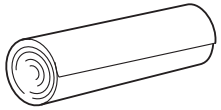	9310519004
Tapping screw (M4 x 25 mm) 	0700076046
Tapping screw (M3 x 12 mm) 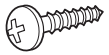	0700019036
Air cleaning filter assy 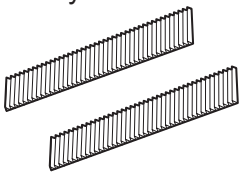	9317250009
Filter holder 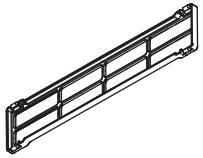	9332911008

OUTDOOR UNIT

Name and Shape	
Drain pipe assy 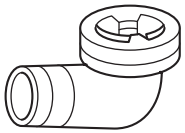	9332574005

1611G4556

SPLIT TYPE
ROOM AIR CONDITIONER

WALL MOUNTED type

INVERTER

SERVICE INSTRUCTION

Models	Indoor unit	Outdoor unit
	AS*G07LMCA	AO*G07LMCA
	AS*G09LMCA	AO*G09LMCA
	AS*G12LMCA	AO*G12LMCA
	AS*G14LMCA	AO*G14LMCA
	ASYG07LMCE	AOYG07LMCE
	ASYG09LMCE	AOYG09LMCE
	ASYG12LMCE	AOYG12LMCE
	ASYG14LMCE	AOYG14LMCE

Refrigerant
R410A

FUJITSU GENERAL LIMITED

CONTENTS

1. DESCRIPTION OF EACH CONTROL OPERATION

2. TROUBLE SHOOTING

3. APPENDING DATA

Refrigerant
R410A

WALL MOUNTED type
INVERTER

1 . DESCRIPTION OF EACH CONTROL OPERATION

1. COOLING OPERATION

A sensor (room temperature thermistor) built in the indoor unit body will usually perceive difference or variation between a set temperature and present room temperature, and controls the operation frequency of the compressor.

* If the room temperature is 2°C higher than a set temperature, the compressor operation frequency will attain to maximum performance.

* If the room temperature is some degrees lower than a set temperature, the compressor will be stopped.

* When the room temperature is between +2°C to -2.5°C of the setting temperature, the compressor frequency is controlled within the range shown in Table1. However, the maximum frequency is limited in the range shown in Fig.1 based on the indoor fan mode and the outdoor temperature.

(Table 1 : Compressor frequency range)

Model	Minimum frequency	Maximum frequency Ⅱ	Maximum frequency Ⅰ
07/09	22rps	76rps	79rps
12/14	18rps	80rps	96rps

When the compressor operates for 30 minutes continuously at over the maximum frequency Ⅱ, the maximum frequency is changed from Maximum Frequency Ⅰ to Maximum Frequency Ⅱ.

(Fig.1 : Outdoor temperature zone)

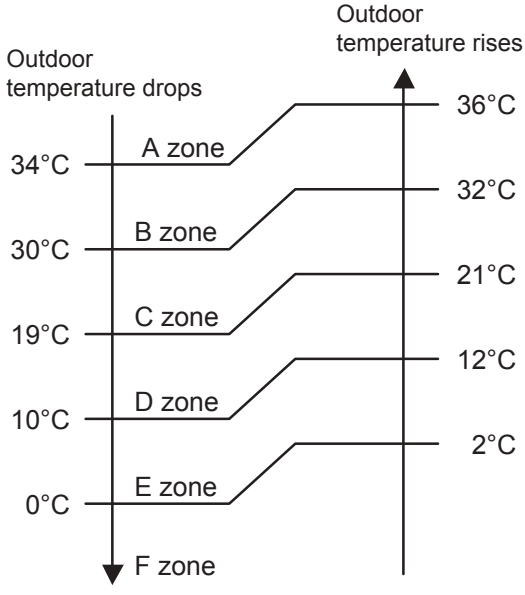

(Table 2 : Limit of maximum speed based on outdoor temperature)

Model	Outdoor temp. zone	Indoor fan mode			
		Hi	Me	Lo	Quiet
07/09	A zone	79rps	61rps	52rps	37rps
	B zone	79rps	61rps	52rps	37rps
	C zone	79rps	61rps	52rps	37rps
	D zone	64rps	55rps	49rps	36rps
	E zone	64rps	55rps	49rps	36rps
	F zone	64rps	55rps	49rps	36rps
12	A zone	96rps	61rps	51rps	33rps
	B zone	96rps	61rps	51rps	33rps
	C zone	96rps	61rps	51rps	33rps
	D zone	68rps	54rps	48rps	33rps
	E zone	68rps	54rps	48rps	33rps
	F zone	68rps	54rps	48rps	33rps
14	A zone	96rps	61rps	51rps	33rps
	B zone	96rps	61rps	51rps	33rps
	C zone	96rps	61rps	51rps	33rps
	D zone	73rps	48ps	36rps	27rps
	E zone	73ps	48rps	36rps	27rps
	F zone	73rps	48rps	36rps	27rps

2. HEATING OPERATION

A sensor (room temperature thermistor) built in the indoor unit body will usually perceive difference or variation between a set temperature and present room temperature, and controls the operation frequency of the compressor.

* If the room temperature is lower by 3°C than a set temperature, the compressor operation frequency will attain to maximum performance.
* If the room temperature is some degrees higher than a set temperature, the compressor will be stopped.

* When the room temperature is between +2.5°C to -3°C of the setting temperature, the compressor frequency is controlled within the range shown in Table 3. However, the maximum frequency is limited shown in Table 4 based on the fan mode.

(Table 3 : Compressor frequency range)

Model	Minimum frequency	Maximum frequency
07/09	22rps	99rps
12	18rps	120rps
14	18rps	119rps

3. DRY OPERATION

The compressor frequency shall change according to the temperature, set temperature, and room temperature variation which the room temperature sensor of the indoor unit body has detected as shown in the Table 5.
However, after the compressor is driven, the indoor unit shall run at operation frequency of 64rps (07/09 type), 61rps (12/14 type), for a minute.

(Table 5 : Compressor frequency in Dry mode)

Model		Operating frequency
07/09	X zone	37rps
	J zone	28rps
	Y zone	0rps

Model		Operating frequency
12/14	X zone	33rps
	J zone	25rps
	Y zone	0rps

(Fig.2 : Compressor control based on room temperature)

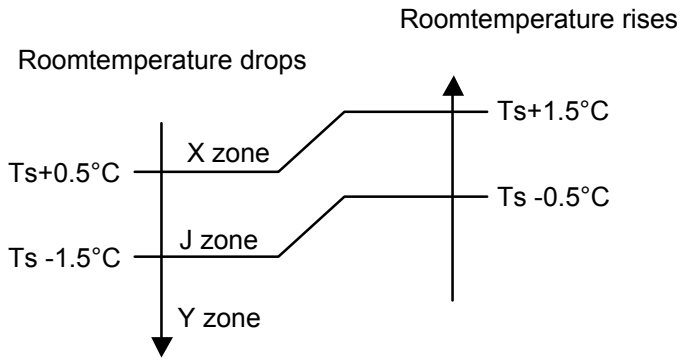

4. AUTO CHANGEOVER OPERATION

When the air conditioner is set to the AUTO mode by remote control, operation starts in the optimum mode from among the Heating, Cooling, Dry and Monitoring modes.
During operation, the optimum mode is automatically switched in accordance with temperature changes.
The temperature can be set between 18°C and 30°C in 1°C steps.

(Fig. 3 : Operation flow chart in Auto changeover)

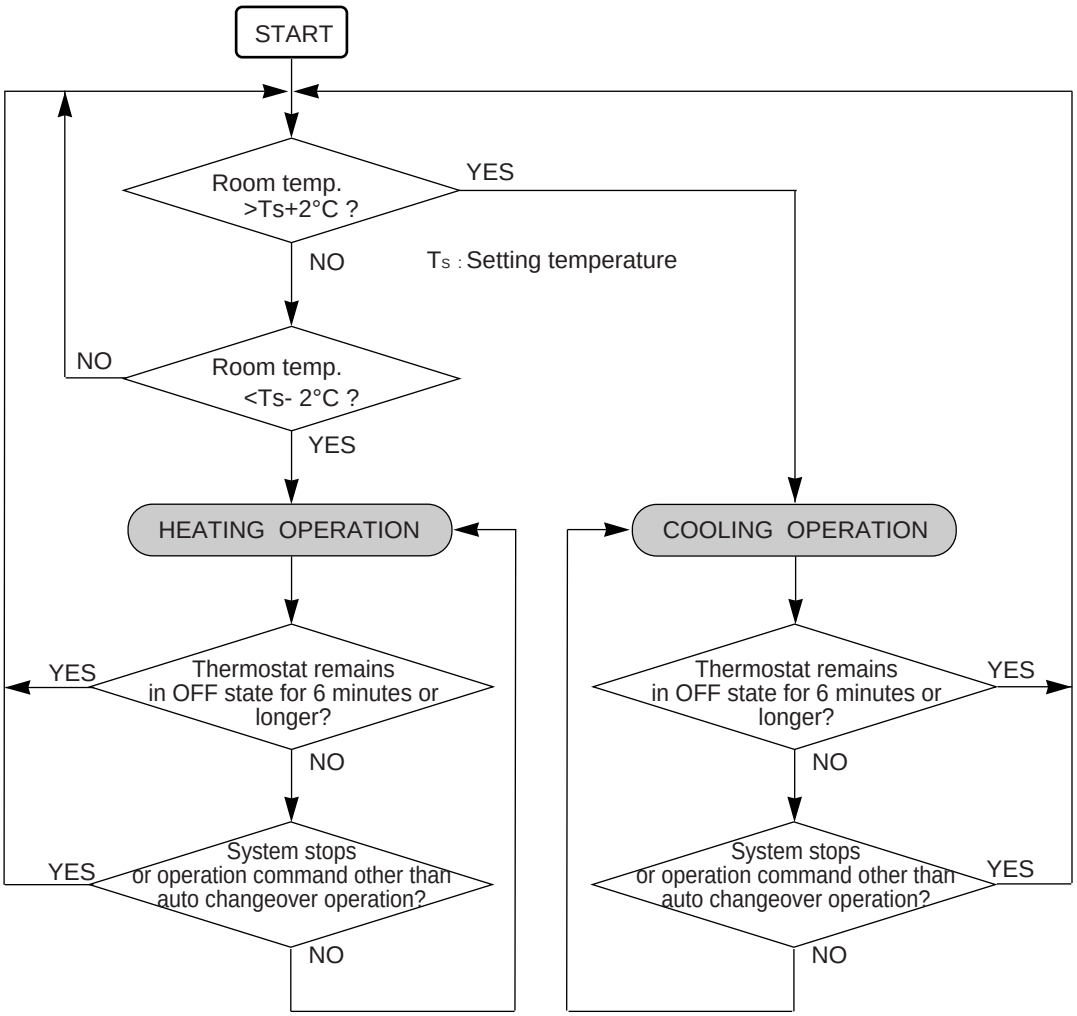

5. INDOOR FAN CONTROL

1. Fan speed

(Table 6 : Indoor fan speed)

( ) model 14

Operation mode	Air flow mode	Speed (rpm)
Heating	Powerful	1380 (1420)
	Hi	1320 (1360)
	Me+	1280 (1330)
	Me	1160 (1220)
	Lo	980 (1040)
	Quiet	710 (770)
	Cool air prevention	600 (600)
	S-Lo	480 (480)

( ) model 14

Operation mode	Air flow mode	Speed (rpm)
Cooling/ Fan	Powerful	1380 (1420)
	Hi	1320 (1360)
	Me	1160 (1220)
	Lo	930 (990)
	Quiet	680 (750)
	*Soft Quiet	600 (670)
Dry	X zone	680 (750)
	J zone	660 (730)

*Note, during Economy operation and operation mode is Fan, air flow is 1 step downs.
(Hi > Me, Me > Lo, Lo > Quiet, Quiet > Soft Quiet)

2. FAN OPERATION

The airflow can be switched in 5 steps such as Auto, Quiet, Lo, Me, Hi, while the indoor fan only runs.
When fan mode is set at [Auto], it operates on [Me] fan Speed.

3. COOLING OPERATION

Switch the airflow [Auto], and the indoor fan motor will run according to a room temperature, as shown in Figure3.
On the other hand, if switched in [Hi]～[Quiet], the indoor motor will run at a constant airflow of [Cool] operation modes Quiet, Lo, Me, Hi, as shown in Table 6.

(Fig.4 : Airflow change - over (Cooling : Auto))

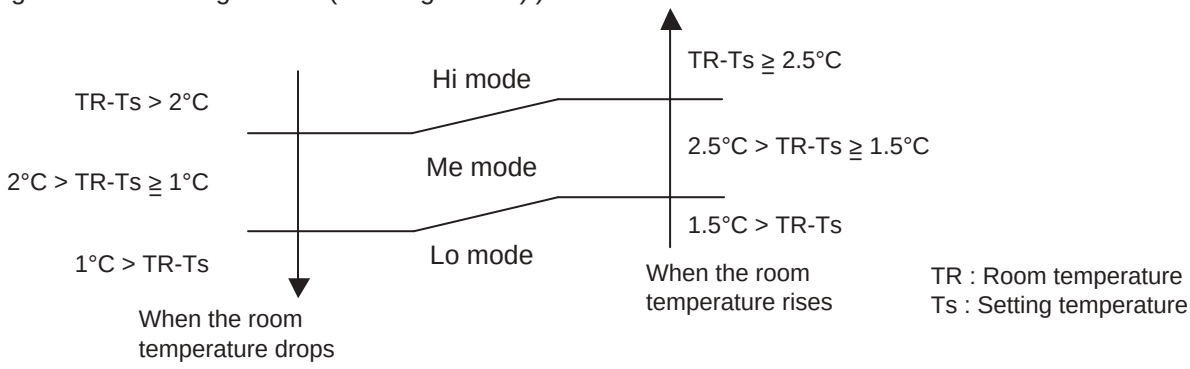

4. DRY OPERATION

Refer to the Table 6.
During the dry mode operation, the fan speed setting can not be changed.

5. HEATING OPERATION

Switch the airflow [Auto], and the indoor fan motor will run according to a room temperature, as shown in Fig. 5
On the other hand, if switched in [Hi] ～ [Quiet], the indoor motor will run at a constant airflow of [Heat] operation modes Quiet, Lo, Me, High, as shown in Table 6.

(Fig.5 : Airflow change - over (Heating : Auto))

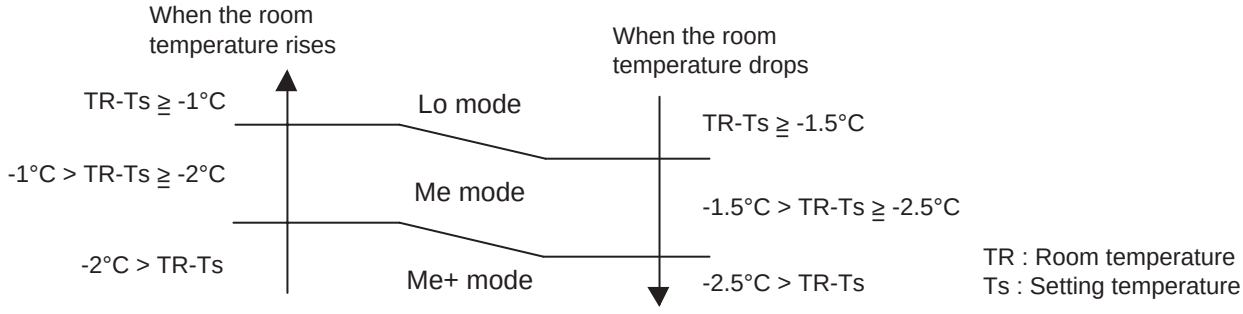

6. COOL AIR PREVENTION CONTROL (Heating mode)

The maximum value of the indoor fan speed is set as shown in Fig.6 based on the detected temperature by the indoor heat-exchanger sensor on heating mode.

(Fig.6 : Cool air prevension control)

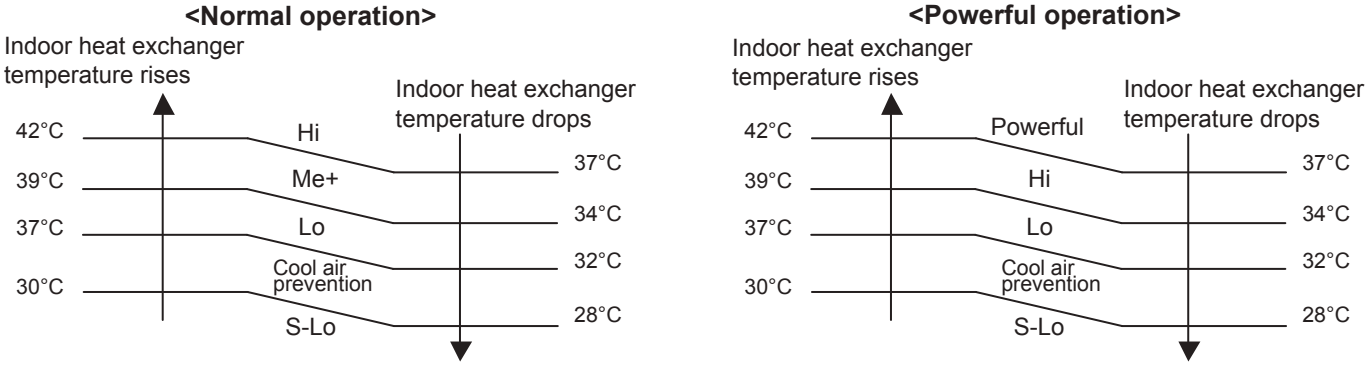

7. MOISTURE RETURN PREVENTION CONTROL (Cooling mode& Dry mode)

Switch the airflow [Auto] at cooling mode, and the indoor fan motor will run as shown in Fig.7.

(Fig.7 : Indoor fan control)

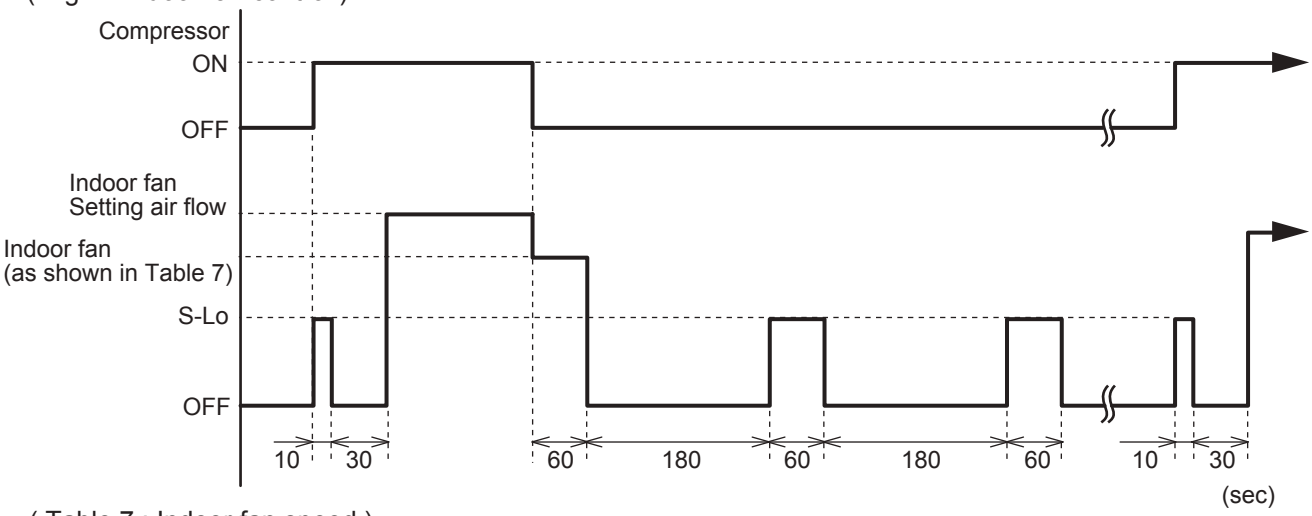

(Table 7 : Indoor fan speed)

Model	Dry		Cooling
	X zone	J zone	
07/09/12	680rpm	660rpm	680rpm
14	750rpm	730rpm	750rpm

8. INDOOR UNIT FAN (CONTROL FOR ENERGY SAVING (Cooling mode))

Switch the airflow at cooling mode, and the indoor fan motor will run as shown in Fig.7.
It depends on the Function setting "Indoor unit fan control for energy saving".

9. DEFROST OPERATION

When the defrost operation starts, the indoor fan runs according to cool air preventtion control for 20 seconds.
And the fan is stopped if 20 seconds have passed.
When 60 seconds have passed after defrost operation is released,
the fan runs according to cool air preventtion control

6. OUTDOOR FAN CONTROL

1. Outdoor Fan Motor

Following table shows the type of the outdoor fan motor. The control method is different between AC motor and DC motor.

(Table 8 : Type of Motor)

Model	AC Motor	DC Motor
07/09/12/14		○

2. Fan Speed

(Table 9 : Outdoor fan speed) (rpm)

Model	Zone ※	Cooling	Heating	Dry
07/09	Y	730/ 650/ 580/ 470	900/ 650/ 580/ 470	730/ 470
	Z	730/ 470/ 250		
	F	250/ 200/ 150		
	G	180/ 150		
12	Y	860/ 780/ 720/ 680/ 470	900/ 760/ 720/ 680/ 470	760/ 470
	Z	860/ 470/ 330		
	F	330/ 280/ 230		
	G	260/ 230/ 200		
14	Y	850/ 750/ 670/ 500	950/ 850/750/ 670/550/450	760/ 470
	Z	850/ 500/ 380		
	F	380/ 280/ 250		
	G	300/ 230/ 200		

※ Refer to Fig.8

(Fig.8 : Outside air temperature zone selection)

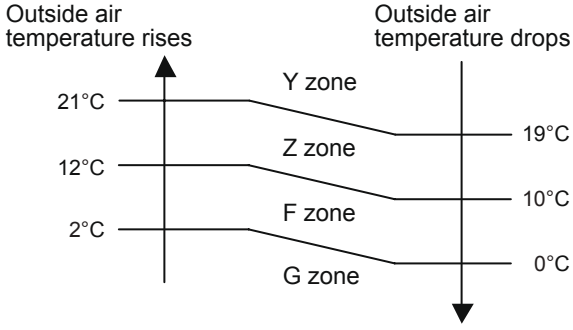

* The outdoor fan speed mentioned above depends on the compressor frequency. (When the compressor frequency increases, the outdoor fan speed also changes to the higher speed. When the compressor frequency decreases, the outdoor fan speed also changes to the lower speed.)

* After the defrost control is operated on the heating mode, the fan speed keeps at the higher speed as table10 without relating to the compressor frequency.

(Table10 : Outdoor fan speed after the defrost)

07/09/12	900rpm
14	950rpm

7. LOUVER CONTROL

1. VERTICAL LOUVER CONTROL

(Function Range)

Each time the button is pressed, the air direction range will change as follow:

①⇄②⇄③⇄④⇄⑤⇄⑥⇄⑦

The Remote Controller's display does not change.

Fig.9 : Air Direction Range

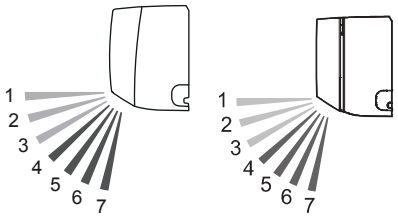

- If you set the angle to position 4.7 for more than 30 minutes in COOL or DRY mode, they automatically return to position 3.
  In COOL or DRY mode, if the angle is set to position 4.7 for many hours, condensation may be formed, and the drips may wet your property.
- Use the air direction adjustments within the ranges shown above.
- The vertical airflow direction is set automatically as shown, in accordance with the type of operation selected.

  Cooling / Dry mode : Horizontal flow ①
  Heating mode : Downward flow ⑦

- During AUTO or Heating mode operation, for the first a few minutes after beginning operation, air-flow will be horizontal 1; the air direction cannot be adjusted during this period.
  The air flow direction setting will temporarily become 1 when the temperature of the air -flow is low at the start of the Heating mode.

2. ADJUST THE RIGHT-LEFT LOUVERS

- Move the Right-Left louvers to adjust air flow in the direction you prefer.

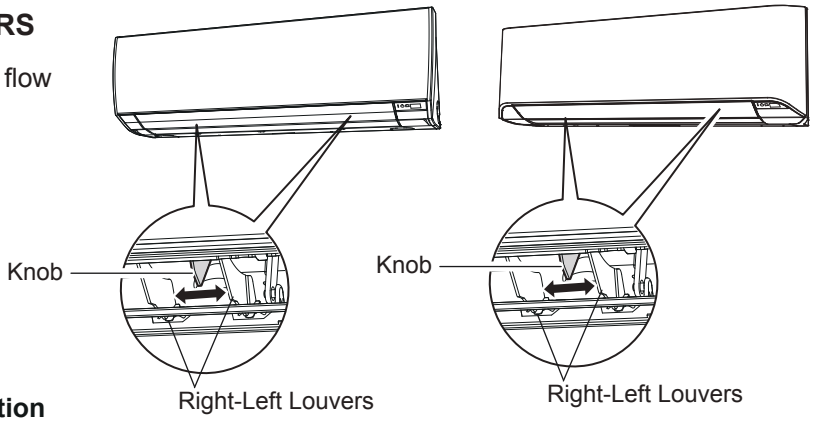

2. SWING OPERATION

To select Vertical Airflow Swing Operation

When the swing signal is received from the remote controller, the vertical louver starts to swing.

(Table11 : Swinging Range)

	Range
Cooling / Dry mode Fan mode (①～③)	① ⇔ ③
Heating mode Fan mode (④～⑦)	④ ⇔ ⑦

- The SWING operation may stop temporarily when the air conditioner's fan is not operating, or when operating at very low speeds.

To select Horizontal Airflow Swing Operation

(No function)

8. COMPRESSOR CONTROL

1. OPEARTION FREQUENCY RANGE

The operation frequency of the compressor is different based on the operation mode as shown in the Table 12.

(Table 12 : Compressor frequency range)

Model	Cooling / Dry		Heating	
	Minimum	Maximum	Minimum	Maximum
07/09	22rps	79rps	22rps	99rps
12	18rps	96rps	18rps	120rps
14	18rps	96rps	18rps	119rps

2. OPEARTION FREQUENCY CONTROL AT NORMAL START UP

The compressor frequency soon after the start-up is controlled as shown in the Fig.10

(Fig.10 : Compressor control at start-up)

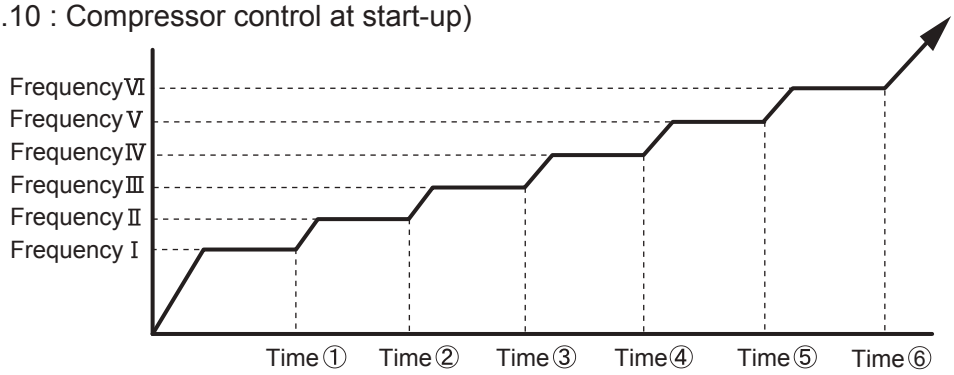

(Frequency)

Model	Frequency Ⅰ	Frequency Ⅱ	Frequency Ⅲ	Frequency Ⅳ	Frequency Ⅴ	Frequency Ⅵ
07/09	70rps	82rps	92rps	96rps	———	———
12/14	56rps	74rps	87rps	97rps	108rps	119rps

(Time)

Model	Time ①	Time ②	Time ③	Time ④	Time ⑤	Time ⑥
07/09	80sec	140sec	200sec	380sec	———	———
12	60sec	100sec	140sec	200sec	350sec	410sec
14	80sec	140sec	200sec	380sec	440sec	500sec

3. LIMITATION OF COMPRESSOR FREQUENCY BY OUTDOOR TEMPERATURE

The minimum compressor frequency is limited by outdoor temperature as shown in the Table13.

(Table13 : Limitation of Compressor Frequency)

[Cooling/ Dry]

Model	10°C		14°C		40°C	
	Under	Over	Under	Over	Under	Over
07/09	43rps	28rps		22rps		30rps
12	45rps	27rps		18rps		30rps
14	42rps	27rps		18rps		30rps

[Heating]

Model	- 3°C		7°C		14°C		40°C	
	Under	Over	Under	Over	Under	Over	Under	Over
07/09	42rps	39rps		28rps		23rps		30rps
12/14	36rps	27rps		27rps		18rps		30rps

9. TIMER OPEARTION CONTROL

9-1 WIRELESS REMOTE CONTROLLER

The Table 14 shows the available timer setting based on the product model.

(Table 14 : Timer Setting)

Model	ON TIMER / OFF TIMER	PROGRAM TIMER	SLEEP TIMER
07/09/12/14	○	○	○

1. OPEARTION FREQUENCY RANGE

- OFF timer : When the clock reaches the set time, the air conditioner will be turned off.

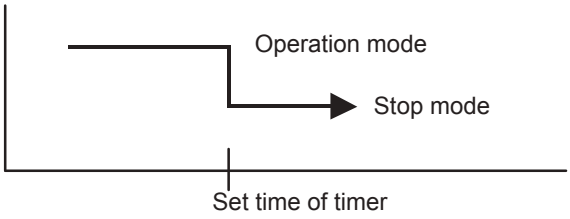

- ON timer : When the clock reaches the set time, the air conditioner will be turned on.

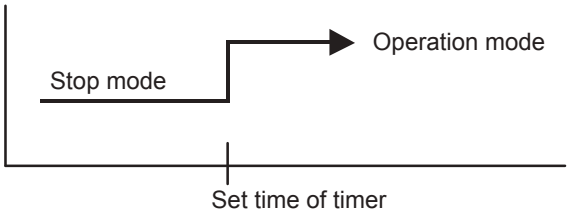

2. PROGRAM TIMER

- The program timer allows the OFF timer and ON timer to be used in combination one time.

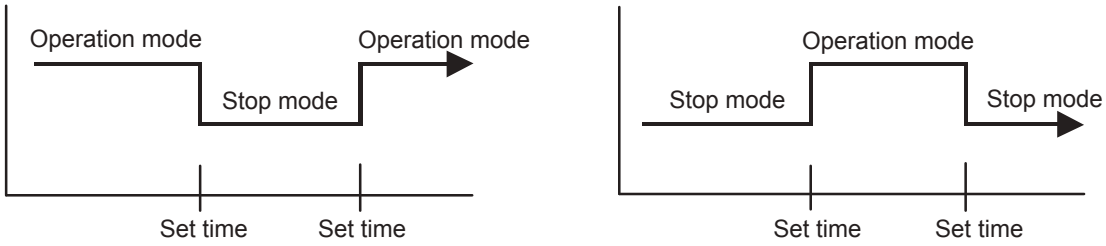

- Operation will start from the timer setting (either OFF timer or ON timer) whichever is closest to the clock's current timer setting.
  The order of operations is indicated by the arrow in the remote control unit's display.
- SLEEP timer operation cannot be combined with ON timer operation.

3. SLEEP TIMER

If the sleep is set, the room temperature is monitored and the operation is stopped automatically. If the operation mode or the set temperature is change after the sleep timer is set, the operation is continued according to the changed setting of the sleep timer from that time ON.

In the cooling operation mode

When the sleep timer is set, the setting temperature is increased 1°C.
It increases the setting temperature another 1°C after 1 hour.
After that, the setting temperature is not changed and the operation is stopped at the time of timer setting.

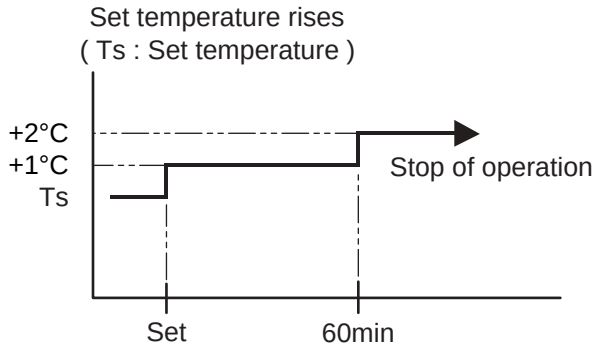

In the heating operation mode

When the sleep timer is set, the setting temperature is decreased 1°C.
It decreases the setting temperature another 1°C every 30 minutes.
Upon lowering 4°C, the setting temperature is not changed and the operation stops at the time of timer setting.

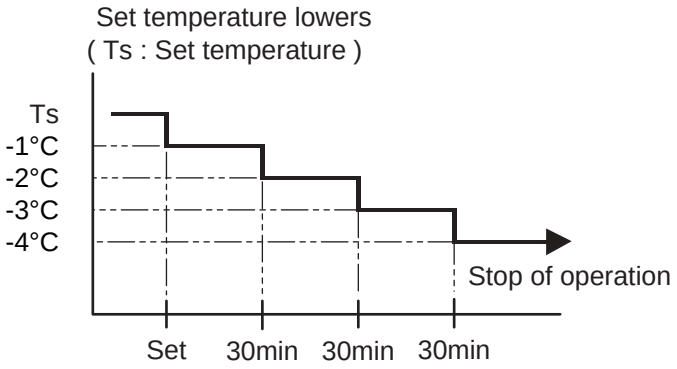

9-2 WIRED REMOTE CONTROLLER (OPTION)

The Table15 shows the available timer setting based on the product model.

(Table15 : Timer Setting)

Model	ON TIMER / OFF TIMER	WEEKLY TIMER	TEMPERATURE SET BACK TIMER
07/09/12/14	○	○	○

1. ON TIMER / OFF TIMER

Same to 9-1 1.ON TIMER / OFF TIMER and shown in those.

2. WEEKLY TIMER

This timer function can set operation times of the each day of the week.
All days can be set together,the weekly timer can be used to repeat the timer setting for all of the days.

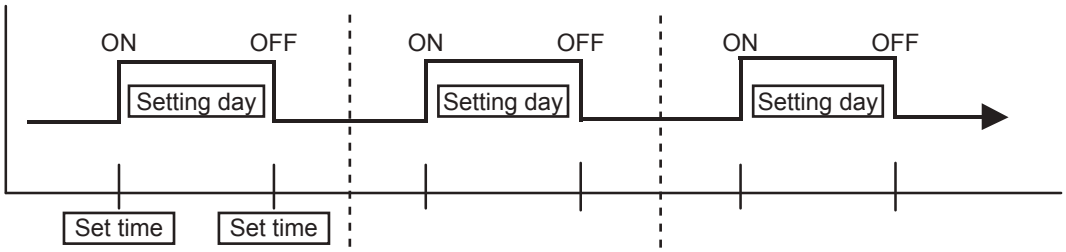

3. TEMPERATURE SET BACK TIMER

This timer function can change setting temperature of setting operation times of the each day of the week.
This can be together with other timer setting.

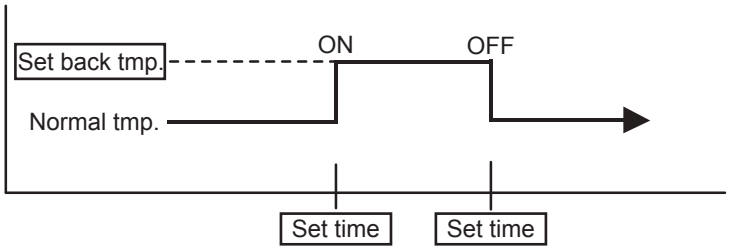

10. ELECTRONIC EXPANSION VALVE CONTROL

The most proper opening of the electronic expansion valve is calculated and controlled under the present operating condition based on the Table16.
The compressor frequency, the detected temperature by the discharge temperature sensor, the indoor heat exchanger sensor, the outdoor heat exchanger sensor, and the outdoor temperature sensor.

(Table16 : The pulse range of the electronic expansion valve control)

Model	Operation mode	Pulse range
07/09/12/14	Cooling / Dry mode	Between 32 to 480 pulses.
	Heating mode	

* The expansion valve is set at 480 pulses 110seconds after the compressor had stopped.
* Initialization will start after 24 hours pass from the last initialization, and the compressor stops
* At the time of supplying the power to the outdoor unit, the initialization of the electronic expansion valve is operated (528 pulses are input to the closing direction).

11. TEST OPERATION CONTROL

[Operation method]
The outdoor unit, may not operate, depending on the room temperature.
In this case, keep on pressing the MANUAL AUTO button of the indoor unit for more than 10 seconds.
The Operation lamp and Timer lamp will begin to flash simultaneously during cooling test run.
Then, heating test run will begin in about 3 minutes when HEAT is selected by the remote control operation.
(When the air conditioner is running by pressing the test run button, the Operation lamp and Timer lamp will simultaneously flash slowly.)

[Release]
Perform the test operation for 60 minutes.
Pressing the MANUAL AUTO button of the indoor unit for more than 3 seconds.

[Using the Wired remote control (Option)]
If the Operation lamp is on, press the START/STOP button to turn it off.
Press the MODE and the FAN buttons at the same time for more than two seconds to start the test operation.
The operation lamp will light up and "o1" will be displayed on the set temperature display.

[Release]
Perform the test operation for 60 minutes.
Pressing the START/STOP button will stop the test operation.

12. PREVENT TO RESTART FOR 3 MINUTES (3 MINUTES ST)

The compressor won't enter operation status for 2 minutes and 20 seconds after the compressor is stopped, even if any operation is given.

13. FOUR-WAY VALVE EXTENSION SELECT

At the time when the air conditioner is switched from the cooling mode to heating mode, the compressor is stopped, and the four-way valve is switched in 2 minutes and 20 seconds later after the compressor stopped.

14. AUTO RESTART

When the power was interrupted by a power failure, etc. during operation, the operation contents at that time are memorized and when power is recovered, operation is automatically started with the memorized operation contents.
When the power is interrupted and recovered during timer operation, since the timer operation time is shifted by the time the power was interrupted, an alarm is given by blinking (7 sec ON/2 sec OFF) the indoor unit body timer lamp.

[Operation contents memorized when the power is interrupted]

- Operation mode
- Set temperature
- Set air flow
- Timer mode and set time (set by wireless remote controller)
- Set air flow Direction
- Swing
- ECONOMY operation
- 10°C HEAT operation
- Outdoor low noise operation

15. MANUAL AUTO OPERATION (Indoor unit body operation)

When the remote control is lost or battery power dissipated, this function will work without the remote control.
When MANUAL AUTO button is set more than 3seconds and less than 10seconds, MANUAL AUTO OPERATION will be started as shown in Table17.To stop operation, press the MANUAL AUTO button for 3seconds.

(Table17 : MANUAL AUTO OPERATION)

	Manual auto operation
OPERATION MODE	Auto changeover
FAN CONT. MODE	Auto
TIMER MODE	Continuous (No timer setting available)
SETTING TEMP.	24°C
SETTING LOUVER	Standard
SWING	OFF
ECONOMY	OFF

16. FORCED COOLING OPERATION (TEST OPERATION)

When FORCED COOLING OPERATION is set, the operation is controlled as shown in Table18.

(Table18 : FORCED COOLING OPERATION)

	Forced cooling operation
OPERATION MODE	Cooling
FAN CONT. MODE	Hi
TIMER MODE	-
SETTING TEMP.	Room Temp is not controlled
SETTING LOUVER	Horizontal (It is changed follow as setting of remote controller)
SWING	OFF
ECONOMY	-

- Forced cooling operation is started when press MANUAL AUTO button for 10 seconds or more.
- During the forced cooling operation, it operates regardless of room temperature sensor.
- Operation LED and timer LED blink at the same time during the forced cooling operation.
  They blink for 1 second ON and 1 second OFF on both operation LED and timer LED (same as test operation).
- Forced cooling operation is released after 60 minutes of starting operation or pressing MANUAL AUTO button for 3 seconds.

17. COMPRESSOR PREHEATING

When the outdoor heat exchanger temperature is lower than 5°C and the all operation has been stopped for 30 minutes, power is applied to the compressor and the compressor is heated.
(By heating the compressor, warm air is quickly discharged when operation is started.)
When operation was started and when the outdoor temperature rises to 7°C or greater, preheating is ended.

18. 10°C HEAT OPERATION

10°C HEAT operation performs as below when pressing 10°C HEAT button or Weekly timer setting on the remote controller.

(Table 19 : 10°C HEAT operation)

Mode	Heating
Setting temperature	10°C
Fan mode	Auto
LED display	Economy
Defrost operation	Operate as normal

19. ECONOMY OPERATION

The ECONOMY operation functions by pressing ECONOMY button on the remote controller.
At the maximum output, ECONOMY Operation is approximately 70% of normal air conditioner operation for cooling and heating.
The ECONOMY operation is almost the same operation as below settings.

(Table 20)

Mode	Cooling/ Dry	Heating
Target temperature	Setting temp.+1°C	Setting temp.-1°C

20. OUTDOOR UNIT LOW NOISE OPERATION

The OUTDOOR UNIT LOW NOISE Operation functions by pressing OUTDOOR UNIT LOW NOISE button on the remote controller.
This operation stops the PFC control, and changes the Current release operation/release value.
OUTDOOR UNIT LOW NOISE Operation mode can be used during cooling, heating and automatic operation.
It can not be used in Fan and Dry mode

(Table 21)

	Control / Release
Current release operation/release value	3.5A / 3.0A

21. POWERFUL OPERATION

The POWERFUL OPERATION functions by pressing POWERFUL button on the remote controller.
The indoor unit & outdoor unit will operate at maximum power as shown in Table22.

(Table22)

	Powerful operation
COMPRESSOR FREQUENCY	Maximum
FAN CONT. MODE	Powerful
SETTING LOUVER	Cooling/ Dry : 3, Heating : 6

Release Condition is as follows.

[Cooling / Dry]

- Room tenperature ≦ Setting temperature - 1°C or Operation time has passed 20 minutes.

[Heating]

- Room tenperature ≧ Setting temperature +2°C and Operation time has passed 20 minutes.

22. DEFROST OPERATION CONTROL

1. CONDITION OF STARTING THE DEFROST OPERATION

The defrost operation starts as shown in the following Table 23.

(Table 23 : Condition of starting Defrost Operation)

Normal defrost	Compressor integrating operation time	
	Less than 25 minutes	More than 25 minutes
	Does not operate	Outdoor heat exchanger temp. ≦ -17°C (at outside air temp. ≧ -10°C)
		Outdoor heat exchanger temp. ≦ Outside air temp.- 7°C or Outdoor heat exchanger temp. ≦ - 20°C (at outside air temp. < -10°C)

Integrating defrost	Compressor integrating operation time		
	More than 240 minutes (For continuous operation)	More than 213 minutes (For continuous operation)	Less than 10 minutes* (For intermittent operation)
	Outdoor heat exchanger temperature below -3°C	Outdoor heat exchanger temperature below -5°C	OFF count of the compressor 40 times

*If the compressor continuous operation time is less than 10 minutes, the OFF number of the compressor is counted.
If any defrost operated, the compressor OFF count is cleared.

2. CONDITION OF THE DEFROST OPERATION COMPLETION

Defrost operation is released when the conditions become as shown in Table 24.

(Table 24 : Defrost Release Condition)

Release Condition
Outdoor heat exchanger temperature sensor value is higher than +16°C or Compressor operation time has passed 15 minutes.

3. Defrost Flow Chart

The defrosting shall proceed by the integrating operation time, outdoor temperature and outdoor heat exchanger temperature as follows.

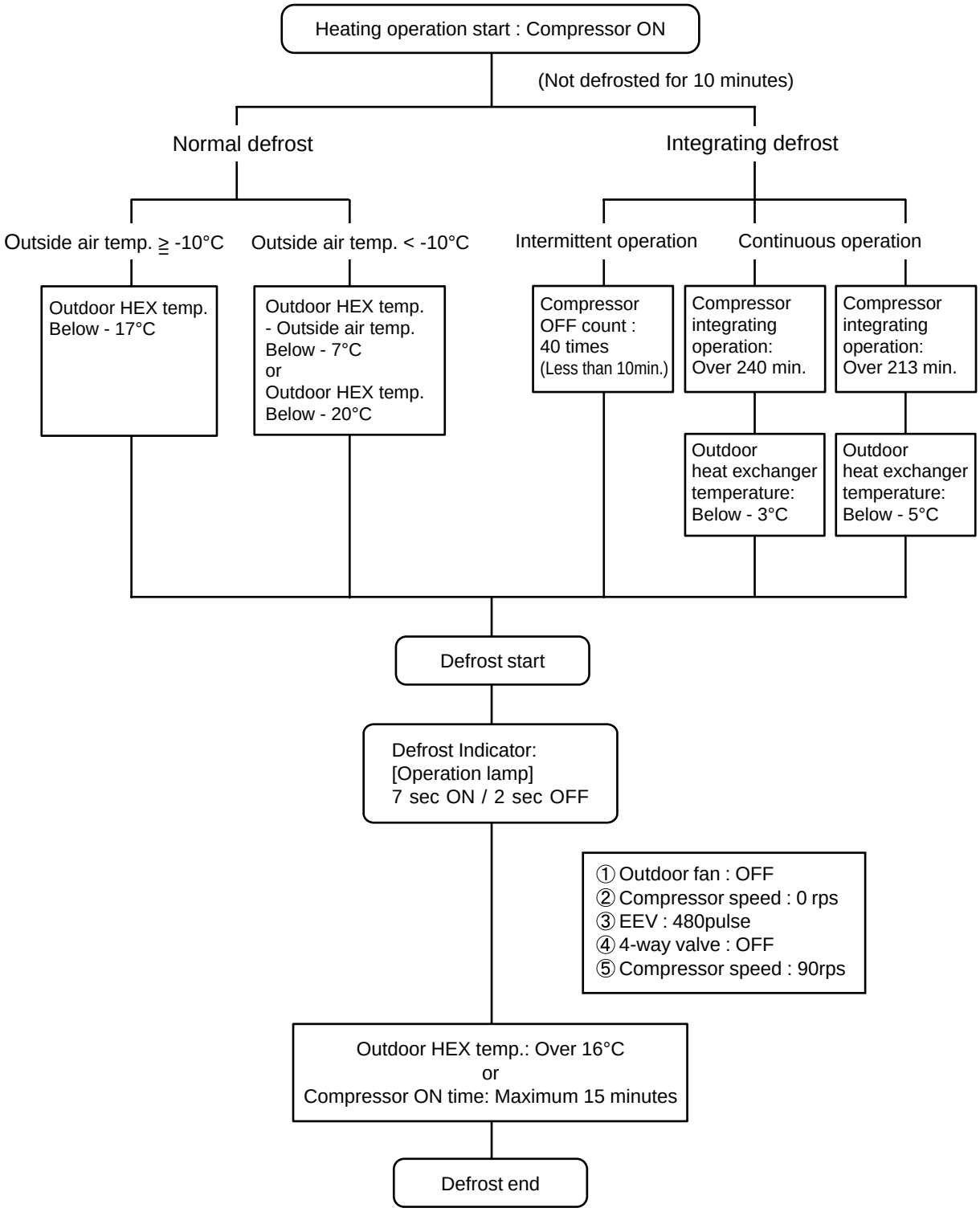

23. OFF DEFROST OPEARTION CONTROL

When operation stops in the [Heating operation] mode, if frost is adhered to the outdoor unit heat exchanger, the defrost operation will proceed automatically. In this time, if indoor unit operation lamp flashes slowly (7 sec ON / 2 sec OFF), the outdoor unit will allow the heat exchanger to defrost, and then stop.

1. OFF DEFROST OPERATION CONDITION

In heating operation, the outdoor heat exchanger temperature is less than - 4°C, compressor continuous operation more than 10 minutes, and compressor operation integrating time lasts for more than 30 minutes.

2. OFF DEFROST END CONDITION

Release Condition
Outdoor heat exchanger temperature sensor value is higher than 16°C or Compressor operation time has passed 15 minutes.

OFF Defrost Flow Chart

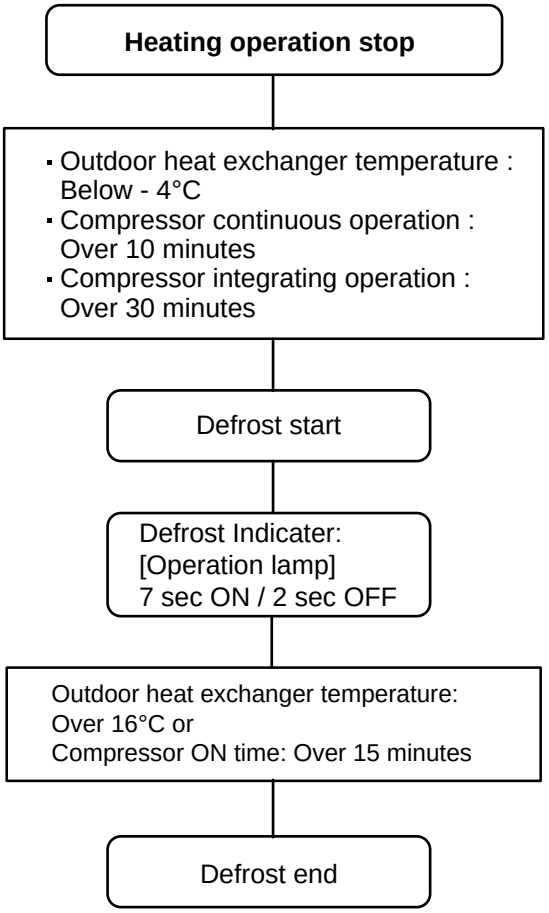

24. VARIOUS PROTECTIONS

1. DISCHARGE GAS TEMPERATURE OVERRISE PREVENSION CONTROL

The discharge gas thermosensor (discharge thermistor : Outdoor side) will detect discharge gas temperature. When the discharge temperature becomes higher than Temperature Ⅰ, the compressor frequency is decreased 20rps, and it continues to decrease the frequency for 20rps every 120 seconds until the temperature becomes lower than Temperature Ⅰ.

When the discharge temperature becomes lower than Temperature Ⅱ, the protection control of the compressor frequency will be released.
When the discharge temperature becomes higher than Temperature Ⅲ, the compressor is stopped and the indoor unit LED starts blinking.

(Table 25 : Discharge temperature over rise prevension control / Release temperature)

Model	Temperature Ⅰ	Temperature Ⅱ	Temperature Ⅲ
07/09/12/14	104°C	101°C	110°C

2. CURRENT RELEASE CONTROL

The compressor frequency is controlled so that the outdoor unit input current does not exceed the current limit value that was set up with the outdoor temperature.
The compressor frequency returns to the designated frequency of the indoor unit at the time when the frequency becomes lower than the release value.

(Table 26 : Current release operation value / Release value)

[Heating]

Model 07/09	OT (Control / Release)
17°C	5.5A / 5.0A
10°C	6.0A / 5.5A
5°C	7.0A / 6.5A
	7.0A / 6.5A

OT : Outdoor Temperature

[Heating]

Model 12	OT (Control / Release)
17°C	5.5A / 5.0A
10°C	7.0A / 6.5A
5°C	8.0A / 7.5A
	8.5A / 8.0A

OT : Outdoor Temperature

[Heating]

Model 14	OT (Control / Release)
17°C	7.0A / 6.5A
10°C	9.0A / 8.5
5°C	10.0A / 9.5A
	10.0A / 9.5A

OT : Outdoor Temperature

[Cooling]

Model 07/09	OT (Control / Release)
46°C	3.5A / 3.0A
40°C	4.0A / 3.5A
	5.5A / 5.0A

OT : Outdoor Temperature

[Cooling]

Model 12	OT (Control / Release)
46°C	4.0A / 3.5A
40°C	5.0A / 4.5A
	6.0A / 5.5A

OT : Outdoor Temperature

[Cooling]

Model 14	OT (Control / Release)
46°C	4.5A / 4.0A
40°C	6.0A / 5.5A
	8.5A / 8.0A

OT : Outdoor Temperature

3. ANTIFREEZING CONTROL (Cooling and Dry mode)

The compressor frequency is decrease on cooling & dry mode when the indoor heat exchanger temperature sensor detects the temperature lower than TemperatureⅠ.
Then, the anti-freezing control is released when it becomes higher than TemperatureⅡ.

(Table 27 : Anti-freezing Protection Operation / Release Temperature)

Outdoor temperature	TemperatureⅠ	TemperatureⅡ
Over than 10°C *1 or 12°C *2	4°C	7°C
Less than 10°C *1 or 12°C *2		13°C

*1. When the temperature rises.
*2. When the temperature drops.

4. COOLING PRESSURE OVERRISE PROTECTION

When the outdoor unit heat exchange sensor temperature rises to 67°C or greater, the compressor and the outdoor fan motor are stopped and trouble display is performed.

5. HIGH TEMPERATURE RELEASE CONTROL (HEATING MODE)

On heating mode, the compressor frequency is controlled as following based on the detection value of the indoor heat exchanger temperature sensor.

[Control System]

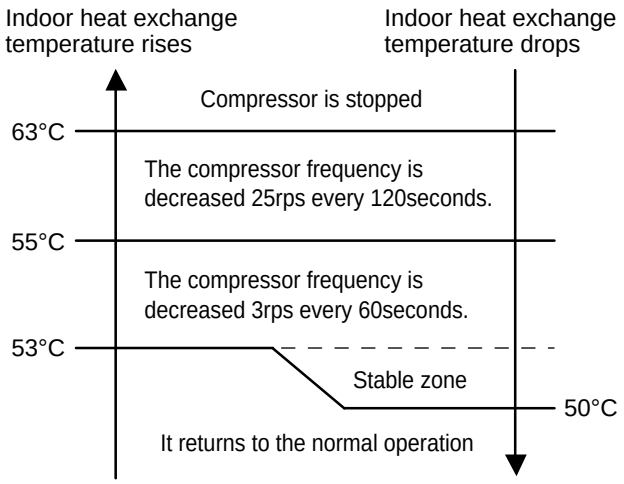

Refrigerant
R410A

WALL MOUNTED type
INVERTER

3 . APPENDING DATA

3-1. FUNCTION SETTING

3-1-1 INDOOR UNIT

- Follow the instructions in the Local Setup Procedure, which is supplied with the remote control, in accordance with the installed condition.
  After the power is turned on, perform the Function Setting on the remote control.
- The settings may be selected between the following two: Function Number or Setting Value.
- Settings will not be changed if invalid numbers or setting values are selected.

1-1. Setting the Filter Sign

The indoor unit has a sign to inform the user that it is time to clean the filter.
Select the time setting for the filter sign display interval in the table below according to the amount of dust or debris in the room.
If you do not wish the filter sign to be displayed, select the setting value for "No indication".

(◆. . . Factory setting)

	Setting Description	Function Number	Setting Value
	Standard (400 hours)	11	00
	Long interval (1000 hours)		01
	Short interval (200 hours)		02
◆	No indication		03

1-2. Cooling Room Temperature Correction

Depending on the installed environment, the room temperature sensor may require a correction.
The settings may be selected as shown in the table below.

(◆. . . Factory setting)

	Setting Description	Function Number	Setting Value
◆	Standard	30	00
	Slightly lower control		01
	Lower control		02
	Warmer control		03

1-3. Heating Room Temperature Correction

Depending on the installed environment, the room temperature sensor may require a correction.
The settings may be selected as shown in the table below.

(◆. . . Factory setting)

	Setting Description	Function Number	Setting Value
◆	Standard	31	00
	Lower control		01
	Slightly warmer control		02
	Warmer control		03

1-4. Setting the Auto Restart

Enable or disable automatic system restart after a power outage.

(◆. . . Factory setting)

	Setting Description	Function Number	Setting Value
◆	Yes	40	00
	No		01

1-5. Indoor room temperature sensor switching function (Only for Wired remote controller)

The following settings are needed when use the control by Wired remote controller temperature sensor.

(◆. . . Factory setting)

	Setting Description	Function Number	Setting Value
◆	No	42	00
	Yes		01

* If setting value is "00" : Room temperature is controlled by the indoor unit temperature sensor.
* If setting value is "01" : Room temperature is controlled by either indoor unit temperature sensor or remote controller unit sensor.

1-6. Remote controller signal code

Change the indoor unit Signal Code, depending on the remote controllers.

(◆. . . Factory setting)

	Setting Description	Function Number	Setting Value
◆	A	44	00
	B		01
	C		02
	D		03

1-7. External input control

"Operation/Stop" mode or "Forced stop" mode can be elected.

(◆. . . Factory setting)

	Setting Description	Function Number	Setting Value
◆	Operation/Stop mode	46	00
	(Setting forbidden)		01
	Forced stop mode		02

1-8. Indoor unit fan control for energy saving

Enable or disable indoor unit fan control when the outdoor unit is stopped.

(◆. . . Factory setting)

	Setting Description	Function Number	Setting Value
	No	49	00
◆	Yes		01

* If setting value is "00" : When the outdoor unit is stopped, the indoor unit fan operates following the setting on the remote controller continuously.
* If setting value is "01" : When the outdoor unit is stopped, the indoor unit fan operates at very low speed intermittently.

3-1-2 Procedures to change the Function Setting for wireless RC

- This procedure changes to the function settings used to control the indoor unit according to the installation conditions.
  Incorrect settings can cause the indoor unit malfunction.
- After the power is turned on, perform the "FUNCTION SETTING" according to the installation conditions using the remote controller.
- Settings will not be changed if invalid numbers or setting values are selected.

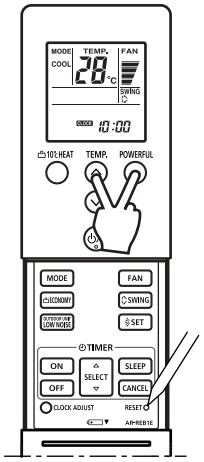

Entering the Function Setting Mode

- While pressing the POWERFUL button and SET TEMP.(∧) button simultaneously, press the RESET button to enter the function setting mode.

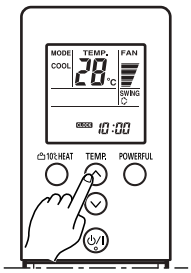

Selecting the Function Number and Setting Value

(1) Press the SET TEMP.(∧) (∨) buttons to select the function number.
(Press the 10°C HEAT button to switch between the left and right digits.)

(2) Press the POWERFUL button to proceed to setting the value.
(Press the POWERFUL button again to return to the function number selection.)

(3) Press the SET TEMP.(∧) (∨) buttons to select the setting value.
(Press the 10°C HEAT button to switch between the left and right digits.)

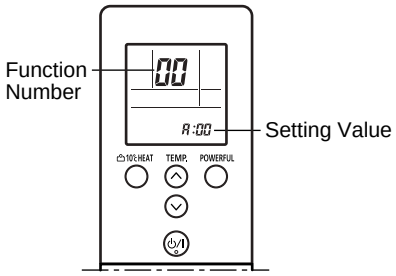

(4) Press the MODE button, in the order listed to confirm the setting.
Please confirm that the beep sounds.

(5) Next, please press the START/STOP(⏻/I) button.
Please confirm that the beep sounds.

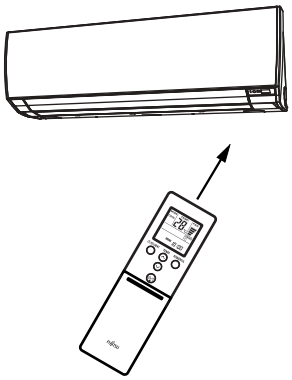

(6) Press the RESET button to cancel the function setting mode.

(7) After completing the FUNCTION SETTING, be sure to turn off the power and turn it on again.

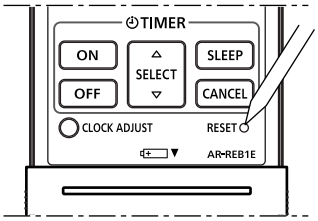

⚠ CAUTION
After turning off the power, wait 10 seconds or more before turning on it again. **The FUNCTION SETTING doesn't become active unless the power is turned off then on again.**

Selecting the Remote Controller Signal Code

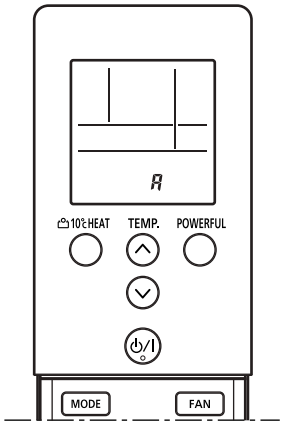

(1) Press the START/STOP(⏻/I) button until only the clock is displayed on the remote controller display.

(2) Press the MODE button for at least 5 seconds to display the current signal code. (initially set to A).

(3) Press the SET TEMP.(∧) (∨) buttons to change the signal code between A→b→c→d.
Match the code on the display to the air conditioner signal code.

(4) Press the MODE button again to return to the clock display.
The signal code will be changed.

⚠ CAUTION
・If no buttons are pressed within 30 seconds after the signal code is displayed, the system returns to the original clock display. ・In this case, start again from step 1. The air conditioner signal code is set to A prior to shipment.

3-2. Thermistor Resistance Values

3-2-1 INDOOR UNIT

Room temperature thermistor		
Temp (℃)	Resistance(kΩ)	Voltage(V)
-10.0	55.46	0.76
-5.0	42.36	0.95
0.0	32.67	1.17
5.0	25.39	1.41
10.0	19.91	1.67
15.0	15.71	1.94
20.0	12.5	2.22
25.0	10.0	2.50
30.0	8.051	2.77
35.0	6.52	3.03
40.0	5.316	3.26
45.0	4.354	3.48

Indoor heat exchanger thermistor		
Temp (℃)	Resistance(kΩ)	Voltage(V)
-30.0	977.6	0.24
-25.0	713.2	0.33
-20.0	526.8	0.43
-15.0	392.1	0.56
-10.0	295.1	0.72
-5.0	223.3	0.91
0.0	170.7	1.13
5.0	131.4	1.38
10.0	102.1	1.64
15.0	79.81	1.92
20.0	62.9	2.21
25.0	49.84	2.50
30.0	39.78	2.78
35.0	31.92	3.05
40.0	25.8	3.30
45.0	20.94	3.52
50.0	17.11	3.72
55.0	14.05	3.90
60.0	11.6	4.06
63.0	10.36	4.14

3-2-2 OUTDOOR UNIT

Discharge thermistor		
Temp (℃)	Resistance(kΩ)	Voltage(V)
-30.0	920.3	0.07
-25.0	676.6	0.09
-20.0	503.5	0.13
-15.0	377.6	0.17
-10.0	286.3	0.22
-5.0	218.6	0.28
0.0	168.6	0.36
5.0	130.9	0.45
10.0	102.5	0.56
15.0	80.82	0.69
20.0	64.22	0.84
25.0	51.36	1.01
30.0	41.33	1.20
35.0	33.64	1.39
40.0	27.26	1.61
45.0	22.33	1.84
50.0	18.40	2.07
55.0	15.23	2.30
60.0	12.68	2.53
65.0	10.60	2.75
70.0	8.909	2.97
75.0	7.518	3.17
80.0	6.375	3.35
85.0	5.427	3.53
90.0	4.639	3.69
95.0	3.981	3.83
100.0	3.430	3.96
105.0	2.965	4.07
110.0	2.573	4.17
115.0	2.239	4.27
120.0	1.956	4.35

Outdoor heat exchanger thermistor		
Temp (℃)	Resistance(kΩ)	Voltage(V)
-30.0	87.21	0.26
-25.0	64.16	0.34
-20.0	47.78	0.45
-15.0	35.86	0.58
-10.0	27.21	0.74
-5.0	20.80	0.93
0.0	16.05	1.14
5.0	12.47	1.38
10.0	9.775	1.64
15.0	7.709	1.91
20.0	6.129	2.18
25.0	4.903	2.46
30.0	3.947	2.73
35.0	3.196	2.99
40.0	2.606	3.23
45.0	2.135	3.45
50.0	1.759	3.65
55.0	1.457	3.83
60.0	1.213	3.98
65.0	1.015	4.12
70.0	0.8531	4.24
75.0	0.7206	4.34
80.0	0.6115	4.43

Outdoor temperature thermistor		
Temp (℃)	Resistance(kΩ)	Voltage(V)
-30.0	205.7	0.78
-25.0	148.8	1.02
-20.0	109.0	1.30
-15.0	80.56	1.61
-10.0	60.23	1.94
-5.0	45.40	2.29
0.0	34.57	2.63
5.0	26.53	2.95
10.0	20.56	3.25
15.0	16.04	3.52
20.0	12.26	3.79
25.0	10.00	3.96
30.0	7.978	4.14
35.0	6.408	4.28
40.0	5.184	4.40
45.0	4.216	4.50
50.0	3.451	4.59
55.0	2.841	4.65

FUJITSU

FUJITSU GENERAL LIMITED
3-3-17,Suenaga,Takatsu-ku,Kawasaki 213-8502,Japan