FUJITSU

TWO ROOM MULTI
INVERTER SYSTEM

SERVICE MANUAL

Refrigerant
R410A

Outdoor unit	Indoor unit
AOYG14LAC2	ASYG07LJCA
	ASYG09LJCA
	ASYG12LJCA
	ASYG07LUCA
	ASYG09LUCA
	ASYG12LUCA
	ASYG07LMCA
	ASYG09LMCA
	ASYG12LMCA
AOYG18LAC2	ASYG07LJCA
	ASYG09LJCA
	ASYG12LJCA
	ASYG07LUCA
	ASYG09LUCA
	ASYG12LUCA
	ASYG14LUCA
	ASYG07LMCA
	ASYG09LMCA
	ASYG12LMCA
	ASYG14LMCA
	AUYG07LVLA
	AUYG09LVLA
	AUYG12LVLA
	AUYG12LVLB
	UTG-UFYD-W
	AGYG09LVCA
	AGYG12LVCA
	ARYG07LLTA
	ARYG09LLTA
	ARYG12LLTA
	ARYG12LLTB

under confirmation

CONTENTS

SPECIFICATIONS 1
DIMENSIONS. 7
REFRIGERANT SYSTEM DIAGRAM . . .13
CIRCUIT DIAGRAM 14
OUTNDOOR PCB CIRCUIT DIAGRAM. . .20
INDOOR PCB CIRCUIT DIAGRAM. 24
ERROR DETECTION. 41
PARTS (OUTDOOR UNIT) 42
PARTS (INDOOR UNIT) 45
ACCESSORIES. 67

FUJITSU GENERAL LIMITED

SPECIFICATIONS

OUTDOOR UNIT

ELECTRICAL SPECIFICATIONS

TYPE		Two room multi	
MODEL NAME		AOYG14LAC2	AOYG18LAC2
COOLING CAPACITY		4.0 kW	5.0 kW
HEATING CAPACITY		4.4 kW	5.6 kW
POWER SUPPLY		230V	230V
FREQUENCY		50 Hz	50 Hz
RUNNING CURRENT	Cooling	5.1 A	6.9 A
	Heating	4.9 A	6.3 A
INPUT POWER	Cooling	1.09 kW	1.56 kW
	Heating	1.03 kW	1.41 kW
EER	Cooling	3.67 kW/kW	3.21 kW/kW
	Heating	4.27 kW/kW	3.97 kW/kW
MAXIMUM CURRENT	Cooling	6.7 A	8.7 A
	Heating	8.5 A	9.2 A
AIR CIRCULATION HIGH		1,850 m^3/hr	2,050 m^3/hr

FAN MOTOR

DISCRIMINATION	MFE-40VVL	MFE-40VVL
HIGH SPEED (COOL)	820 r.p.m.	900 r.p.m.
HIGH SPEED (HEAT)	820 r.p.m.	900 r.p.m.

NOISE LEVEL

COOL	47 dB(A)	50 dB(A)
HEAT	49 dB(A)	51 dB(A)

COMPRESSOR AND REFRIGERANT

COMPRESSOR TYPE		Hermetic rotary, 4 poles, DC inverter, 1-cylinder type	Hermetic rotary, 4 poles, DC inverter, 2-cylinder type
DISCRIMINATION		DA108X1C-20FZA1	808-911-80B
WEIGHT (including oil)		10.4 kg	10.0 kg
PRECHARGED REFRIGERANT		1,250 g	1,300 g
REFRIGERANT TYPE		R410A	R410A
FULL CHARGE — Total Pipe Length	20 m	1,250 g	1,300 g
	25 m	1,300 g	1,400 g
	30 m	1,350 g	1,500 g
ADDITIONAL CHARGE		10 g/m	20 g/m
MAXIMUM PIPE LENGTH (total)		30 m	
MINIMUM PIPE LENGTH (total)		6 m	
MAXIMUM PIPE LENGTH (each unit)		20 m	
MINIMUM PIPE LENGTH (each unit)		3 m	
MAX ELEVATION (between indoor units)		10 m	
MAX ELEVATION (between IU and OU)		15 m	

MEASUREMENT

DIMENSIONS	H x W x D	540 x 790 x 290 mm	
WEIGHT	Shipping / Net	41 kg / 37 kg	42 kg / 38 kg

INDOOR UNIT
COMPACT WALL MOUNTED

ELECTRICAL DATA

MODEL NAME	ASYG07LJCA	ASYG09LJCA	ASYG12LJCA
CAPACITY	2.0 kW class	2.5 kW class	3.5 kW class

FAN MOTOR

DISCRIMINATION			MFD-12TYAN		
FAN SPEED	Cooling	High	1,050 r.p.m.	1,100 r.p.m.	1,200 r.p.m.
		Medium	950 r.p.m.	980 r.p.m.	1,050 r.p.m.
		Low	850 r.p.m.	850 r.p.m.	880 r.p.m.
		Quiet	710 r.p.m.	710 r.p.m.	710 r.p.m.
	Heating	High	1,050 r.p.m.	1,100 r.p.m.	1,200 r.p.m.
		Medium	950 r.p.m.	980 r.p.m.	1,050 r.p.m.
		Low	850 r.p.m.	850 r.p.m.	910 r.p.m.
		Quiet	720 r.p.m.	720 r.p.m.	720 r.p.m.
AIR FLOW	Cooling	High	560 m^3/h	600 m^3/h	660 m^3/h
		Medium	500 m^3/h	520 m^3/h	560 m^3/h
		Low	430 m^3/h	430 m^3/h	450 m^3/h
		Quiet	340 m^3/h	340 m^3/h	340 m^3/h
	Heating	High	560 m^3/h	600 m^3/h	660 m^3/h
		Medium	500 m^3/h	520 m^3/h	560 m^3/h
		Low	430 m^3/h	430 m^3/h	470 m^3/h
		Quiet	350 m^3/h	350 m^3/h	350 m^3/h
NOISE LEVEL	Cooling	High	36 dB(A)	37 dB(A)	40 dB(A)
		Medium	32 dB(A)	33 dB(A)	36 dB(A)
		Low	29 dB(A)	29 dB(A)	30 dB(A)
		Quiet	25 dB(A)	25 dB(A)	25 dB(A)
	Heating	High	36 dB(A)	37 dB(A)	40 dB(A)
		Medium	32 dB(A)	33 dB(A)	36 dB(A)
		Low	29 dB(A)	29 dB(A)	31 dB(A)
		Quiet	25 dB(A)	25 dB(A)	25 dB(A)

MEASUREMENTS

DIMENSIONS	H x W x D	280 x 790 x 203 mm
WEIGHT	Net / Shipping	8.0 kg / 10.5 kg

INDOOR UNIT
COMPACT WALL MOUNTED

ELECTRICAL DATA

MODEL NAME	ASYG07LUCA	ASYG09LUCA	ASYG12LUCA	ASYG14LUCA
CAPACITY	2.0 kW class	2.5 kW class	3.5 kW class	4.0 kW class

FAN MOTOR

DISCRIMINATION			MFE-60TVT			
FAN SPEED	Cooling	High	980 r.p.m.	1,030 r.p.m.	1,110 r.p.m.	1,180 r.p.m.
		Medium	910 r.p.m.	950 r.p.m.	1,030 r.p.m.	1,080 r.p.m.
		Low	850 r.p.m.	850 r.p.m.	930 r.p.m.	980 r.p.m.
		Quiet	650 r.p.m.	650 r.p.m.	650 r.p.m.	740 r.p.m.
	Heating	High	980 r.p.m.	1,030 r.p.m.	1,110 r.p.m.	1,180 r.p.m.
		Medium	910 r.p.m.	950 r.p.m.	1,030 r.p.m.	1,080 r.p.m.
		Low	850 r.p.m.	850 r.p.m.	930 r.p.m.	1,010 r.p.m.
		Quiet	650 r.p.m.	650 r.p.m.	650 r.p.m.	790 r.p.m.
AIR FLOW	Cooling	High	570 m^3/h	600 m^3/h	660 m^3/h	710 m^3/h
		Medium	520 m^3/h	550 m^3/h	600 m^3/h	640 m^3/h
		Low	470 m^3/h	470 m^3/h	530 m^3/h	570 m^3/h
		Quiet	330 m^3/h	330 m^3/h	330 m^3/h	390 m^3/h
	Heating	High	570 m^3/h	600 m^3/h	660 m^3/h	710 m^3/h
		Medium	520 m^3/h	550 m^3/h	600 m^3/h	640 m^3/h
		Low	470 m^3/h	470 m^3/h	530 m^3/h	590 m^3/h
		Quiet	330 m^3/h	330 m^3/h	330 m^3/h	430 m^3/h
NOISE LEVEL	Cooling	High	35 dB(A)	36 dB(A)	37 dB(A)	41 dB(A)
		Medium	30 dB(A)	32 dB(A)	34 dB(A)	36 dB(A)
		Low	28 dB(A)	28 dB(A)	31 dB(A)	33 dB(A)
		Quiet	21 dB(A)	21 dB(A)	21 dB(A)	25 dB(A)
	Heating	High	35 dB(A)	36 dB(A)	37 dB(A)	41 dB(A)
		Medium	30 dB(A)	32 dB(A)	34 dB(A)	36 dB(A)
		Low	28 dB(A)	28 dB(A)	31 dB(A)	34 dB(A)
		Quiet	21 dB(A)	21 dB(A)	21 dB(A)	27 dB(A)

MEASUREMENTS

DIMENSIONS	H x W x D	282 x 870 x 185 mm
WEIGHT	Net / Shipping	9.5 kg / 12.0 kg

under confirmatio

INDOOR UNIT
COMPACT WALL MOUNTED

ELECTRICAL DATA

MODEL NAME	ASYG07LMCA	ASYG09LMCA	ASYG12LMCA	ASYG14LMCA
CAPACITY	2.0 kW class	2.5 kW class	3.5 kW class	4.0 kW class

FAN MOTOR

DISCRIMINATION			MFD-12CYN	
FAN SPEED	Cooling	High	1,320 r.p.m.	1,360 r.p.m.
		Medium	1,160 r.p.m.	1,220 r.p.m.
		Low	930 r.p.m.	990 r.p.m.
		Quiet	680 r.p.m.	750 r.p.m.
	Heating	High	1,320 r.p.m.	1,360 r.p.m.
		Medium	1,160 r.p.m.	1,220 r.p.m.
		Low	980 r.p.m.	1,040 r.p.m.
		Quiet	710 r.p.m.	790 r.p.m.
AIR FLOW	Cooling	High	600 m3/h	770 m3/h
		Medium	550 m3/h	640 m3/h
		Low	470 m3/h	570 m3/h
		Quiet	330 m3/h	390 m3/h
	Heating	High	600 m3/h	710 m3/h
		Medium	550 m3/h	640 m3/h
		Low	470 m3/h	590 m3/h
		Quiet	330 m3/h	430 m3/h
NOISE LEVEL	Cooling	High	43 dB(A)	44 dB(A)
		Medium	40 dB(A)	40 dB(A)
		Low	32 dB(A)	33 dB(A)
		Quiet	21 dB(A)	25 dB(A)
	Heating	High	43 dB(A)	44 dB(A)
		Medium	38 dB(A)	40 dB(A)
		Low	33 dB(A)	35 dB(A)
		Quiet	22 dB(A)	27 dB(A)

MEASUREMENTS

DIMENSIONS	H x W x D	268 x 840 x 203 mm
WEIGHT	Net / Shipping	8.5 kg / 10.5 kg

PANEL

MEASUREMENTS

MODEL NAME		UTG-UFYD-W
DIMENSIONS	H x W x D	49 x 700 x 700 mm
WEIGHT	Net / Shipping	2.6 kg / 4.5 kg

INDOOR UNIT
COMPACT CASSETTE

ELECTRICAL DATA

MODEL NAME	AUYG07LVLA	AUYG09LVLA	AUYG12LVLA AUYG12LVLB
CAPACITY	2.0 kW class	2.5 kW class	3.5 kW class

FAN MOTOR

DISCRIMINATION			MFF-24RVL		
FAN SPEED	Cooling	High	590 r.p.m.	590 r.p.m.	660 r.p.m.
		Medium	540 r.p.m.	540 r.p.m.	580 r.p.m.
		Low	490 r.p.m.	490 r.p.m.	520 r.p.m.
		Quiet	440 r.p.m.	440 r.p.m.	460 r.p.m.
	Heating	High	590 r.p.m.	590 r.p.m.	650 r.p.m.
		Medium	540 r.p.m.	540 r.p.m.	580 r.p.m.
		Low	490 r.p.m.	490 r.p.m.	520 r.p.m.
		Quiet	440 r.p.m.	440 r.p.m.	460 r.p.m.
AIR FLOW	Cooling	High	540 m^3/h	540 m^3/h	610 m^3/h
		Medium	490 m^3/h	490 m^3/h	530 m^3/h
		Low	440 m^3/h	440 m^3/h	470 m^3/h
		Quiet	390 m^3/h	390 m^3/h	410 m^3/h
	Heating	High	540 m^3/h	540 m^3/h	610 m^3/h
		Medium	490 m^3/h	490 m^3/h	530 m^3/h
		Low	440 m^3/h	440 m^3/h	470 m^3/h
		Quiet	390 m^3/h	390 m^3/h	410 m^3/h
NOISE LEVEL	Cooling	High	33 dB(A)	33 dB(A)	37 dB(A)
		Medium	31 dB(A)	31 dB(A)	33 dB(A)
		Low	29 dB(A)	29 dB(A)	31 dB(A)
		Quiet	27 dB(A)	27 dB(A)	28 dB(A)
	Heating	High	34 dB(A)	34 dB(A)	37 dB(A)
		Medium	32 dB(A)	32 dB(A)	33 dB(A)
		Low	29 dB(A)	29 dB(A)	31 dB(A)
		Quiet	27 dB(A)	27 dB(A)	28 dB(A)

MEASUREMENTS

DIMENSIONS	H x W x D	245 x 570 x 570 mm
WEIGHT	Net / Shipping	15 kg / 18 kg

PANEL

MEASUREMENTS

MODEL NAME		UTG-UFYD-W
DIMENSIONS	H x W x D	49 x 700 x 700 mm
WEIGHT	Net / Shipping	2.6 kg / 4.5 kg

INDOOR UNIT
FLOOR

ELECTRICAL DATA

MODEL NAME	AGYG09LVCA	AGYG12LVCA
CAPACITY	2.5 kW class	3.5 kW class

FAN MOTOR (upper fan)

DISCRIMINATION			MFD-14TXN	
FAN SPEED	Cooling	High	1,120 r.p.m.	1,240 r.p.m.
		Medium	960 r.p.m.	1,050 r.p.m.
		Low	820 r.p.m.	860 r.p.m.
		Quiet	660 r.p.m.	660 r.p.m.
	Heating	High	1,120 r.p.m.	1,240 r.p.m.
		Medium	1,000 r.p.m.	1,080 r.p.m.
		Low	860 r.p.m.	910 r.p.m.
		Quiet	660 r.p.m.	660 r.p.m.

FAN MOTOR (lower fan)

DISCRIMINATION			MFD-14SXN	
FAN SPEED	Cooling	High	950 r.p.m.	1,050 r.p.m.
		Medium	820 r.p.m.	890 r.p.m.
		Low	700 r.p.m.	730 r.p.m.
		Quiet	560 r.p.m.	560 r.p.m.
	Heating	High	950 r.p.m.	1,050 r.p.m.
		Medium	850 r.p.m.	920 r.p.m.
		Low	730 r.p.m.	770 r.p.m.
		Quiet	560 r.p.m.	560 r.p.m.

2 FAN RUNNING

AIR CIRCULATION HIGH	Cooling	High	570 m3/hr	570 m3/hr
		Medium	460 m3/hr	460 m3/hr
		Low	390 m3/hr	360 m3/hr
		Quiet	270 m3/hr	270 m3/hr
	Heating	High	600 m3/hr	600 m3/hr
		Medium	480 m3/hr	480 m3/hr
		Low	370 m3/hr	370 m3/hr
		Quiet	270 m3/hr	270 m3/hr
NOISE LEVEL	Cooling	High	39 dB(A)	42 dB(A)
		Medium	34 dB(A)	36 dB(A)
		Low	28 dB(A)	30 dB(A)
		Quiet	22 dB(A)	22 dB(A)
	Heating	High	39 dB(A)	42 dB(A)
		Medium	35 dB(A)	38 dB(A)
		Low	30 dB(A)	32 dB(A)
		Quiet	22 dB(A)	22 dB(A)

MEASUREMENT

DIMENSIONS	H x W x D	600 x 740 x 200 mm
WEIGHT	Net / Shipping	14 kg / 17 kg

INDOOR UNIT
SLIM DUCT

ELECTRICAL DATA

MODEL NAME	ARYG07LLTA	ARYG09LLTA	ARYG12LLTA ARYG12LLTB
CAPACITY	2.0 kW class	2.5 kW class	3.5 kW class

FAN MOTOR

DISCRIMINATION			MFG-14WV		
FAN SPEED	Cooling	High	1,160 r.p.m.	1,260 r.p.m.	1,340 r.p.m.
		Medium	1,000 r.p.m.	1,160 r.p.m.	1,240 r.p.m.
		Low	940 r.p.m.	1,060 r.p.m.	1,140 r.p.m.
		Quiet	880 r.p.m.	960 r.p.m.	1,030 r.p.m.
	Heating	High	1,160 r.p.m.	1,260 r.p.m.	1,340 r.p.m.
		Medium	1,000 r.p.m.	1,160 r.p.m.	1,240 r.p.m.
		Low	940 r.p.m.	1,060 r.p.m.	1,140 r.p.m.
		Quiet	880 r.p.m.	960 r.p.m.	1,030 r.p.m.
AIR FLOW	Cooling	High	550 m^3/h	600 m^3/h	650 m^3/h
		Medium	490 m^3/h	550 m^3/h	600 m^3/h
		Low	470 m^3/h	500 m^3/h	550 m^3/h
		Quiet	440 m^3/h	450 m^3/h	480 m^3/h
	Heating	High	550 m^3/h	600 m^3/h	650 m^3/h
		Medium	490 m^3/h	550 m^3/h	600 m^3/h
		Low	470 m^3/h	500 m^3/h	550 m^3/h
		Quiet	440 m^3/h	450 m^3/h	480 m^3/h
NOISE LEVEL	Cooling	High	28 dB(A)	28 dB(A)	29 dB(A)
		Medium	26 dB(A)	27 dB(A)	28 dB(A)
		Low	25 dB(A)	26 dB(A)	27 dB(A)
		Quiet	24 dB(A)	25 dB(A)	26 dB(A)
	Heating	High	28 dB(A)	28 dB(A)	29 dB(A)
		Medium	26 dB(A)	26 dB(A)	28 dB(A)
		Low	25 dB(A)	25 dB(A)	27 dB(A)
		Quiet	24 dB(A)	24 dB(A)	24 dB(A)

MEASUREMENTS

DIMENSIONS	H x W x D	198 x 700 x 620 mm
WEIGHT	Net / Shipping	19 kg / 25 kg

DIMENSIONS

OUTDOOR UNIT
(unit : mm)

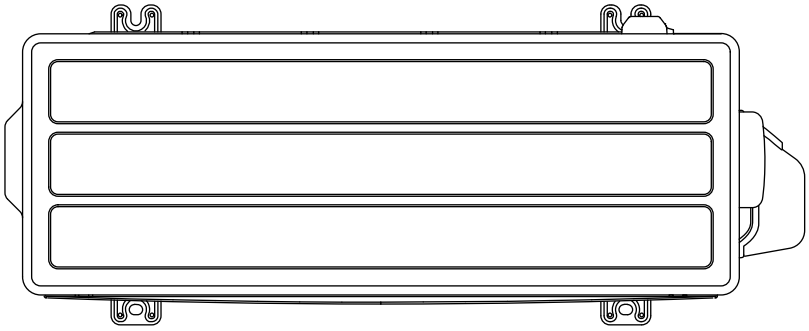

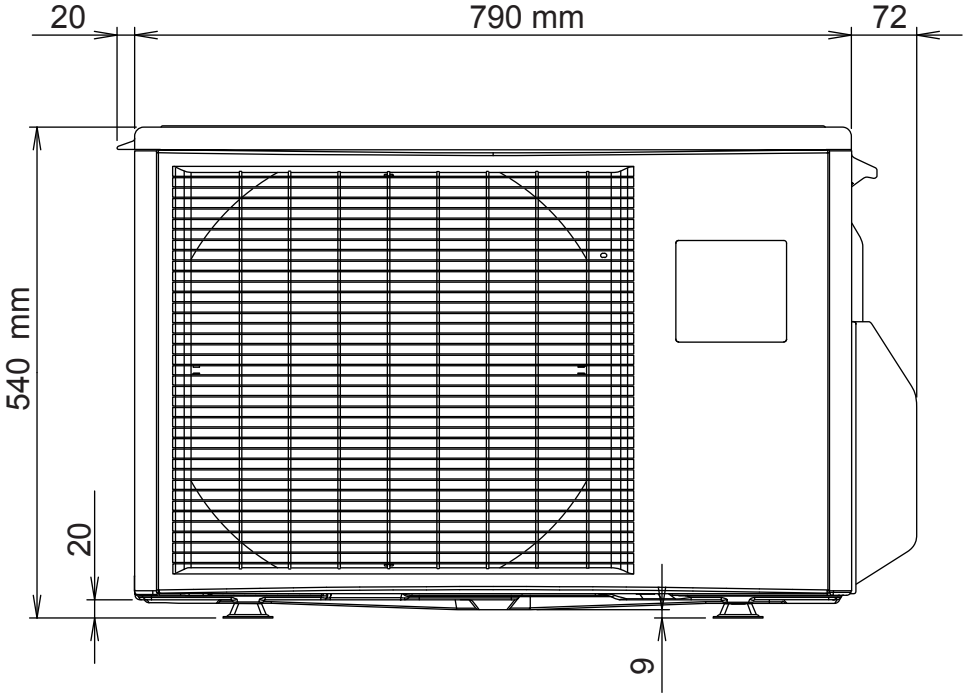

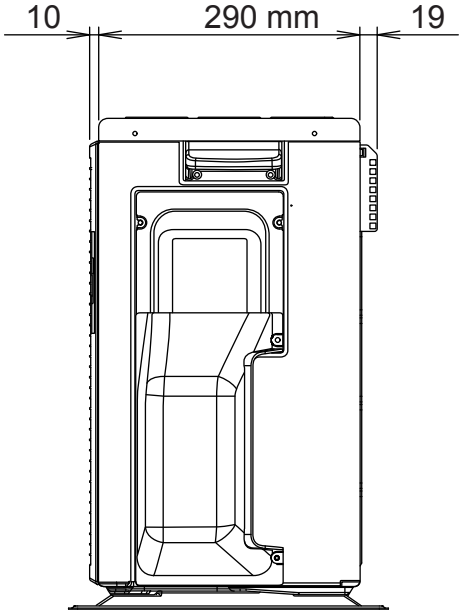

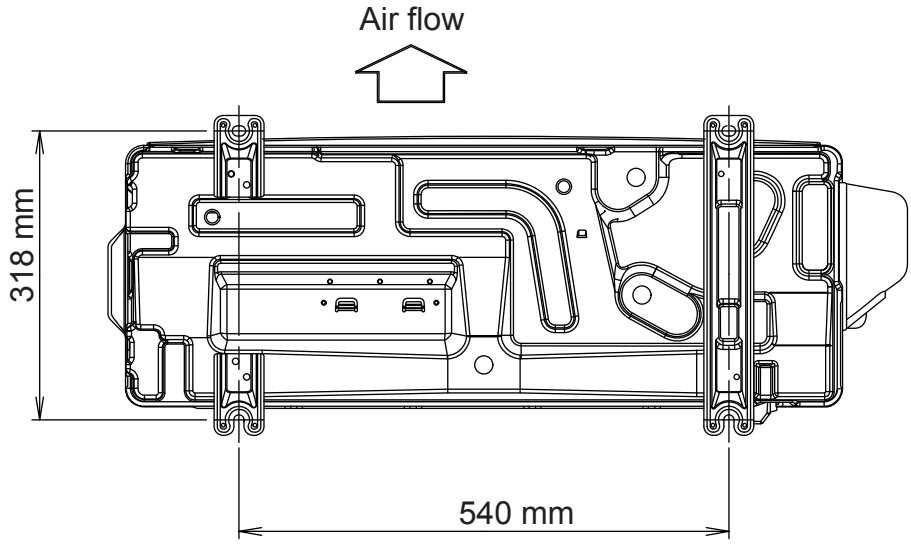

INDOOR UNIT
COMPACT WALL MOUNTED
ASYG07LJCA
ASYG09LJCA
ASYG12LJCA

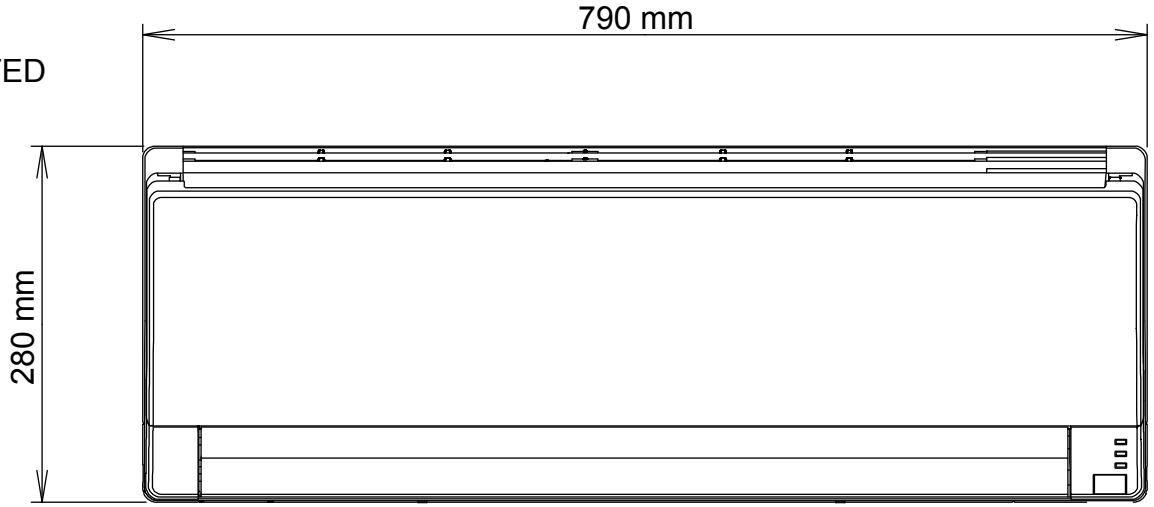

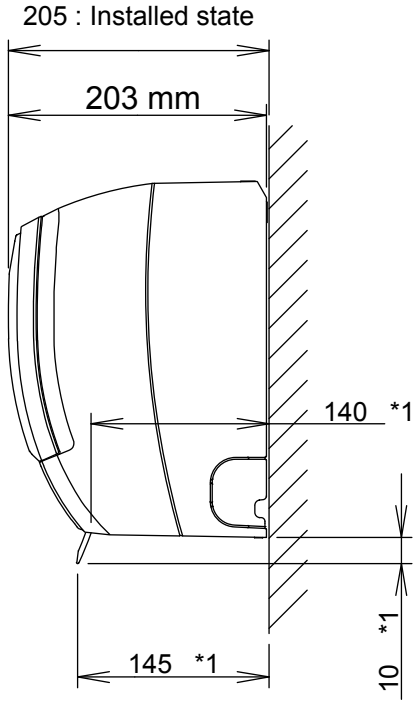

*1: Vertical flap is downward

INDOOR UNIT
COMPACT WALL MOUNTED
ASYG07LUCA
ASYG09LUCA
ASYG12LUCA
ASYG14LUCA

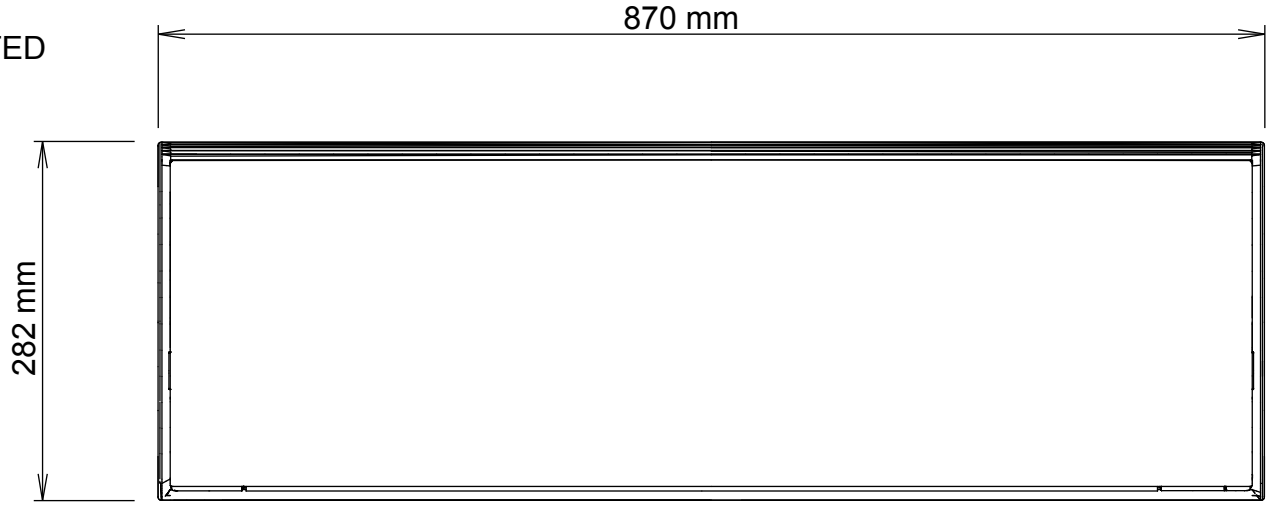

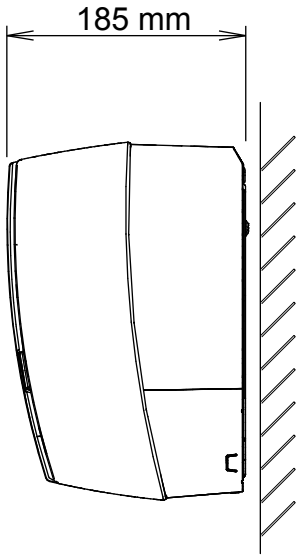

Drain hose length : 600 mm

INDOOR UNIT
COMPACT WALL MOUNTED
ASYG07LMCA
ASYG09LMCA
ASYG12LMCA
ASYG14LMCA

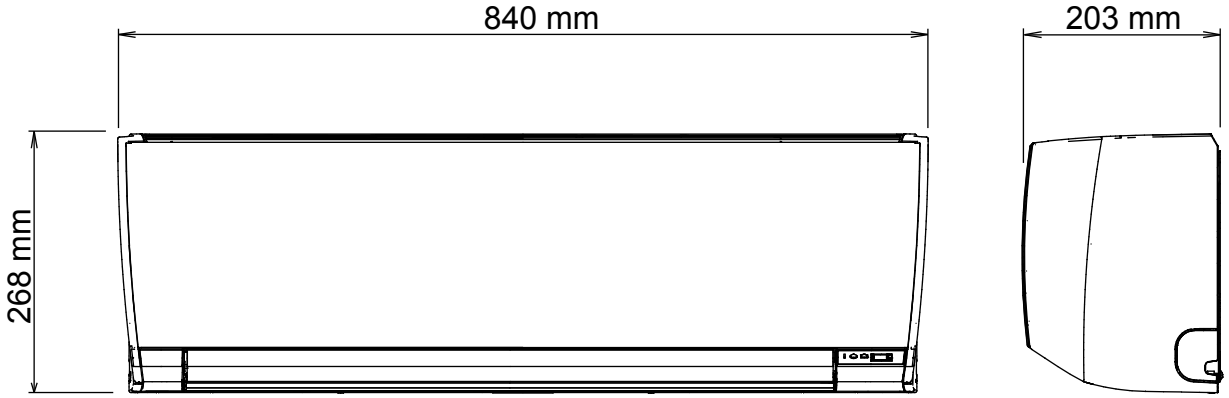

Drain hose

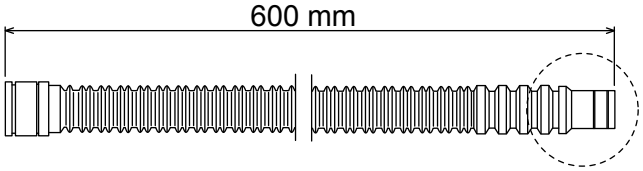

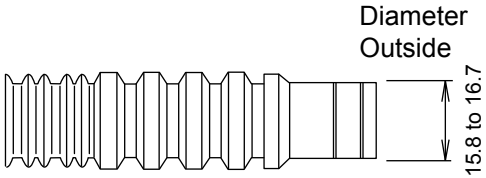

Inside : 13.8 mm

2013.04.25

INDOOR UNIT
COMPACT CASSETTE
AUYG07LVLA
AUYG09LVLA
AUYG12LVLA
AUYG12LVLB

Unit : mm

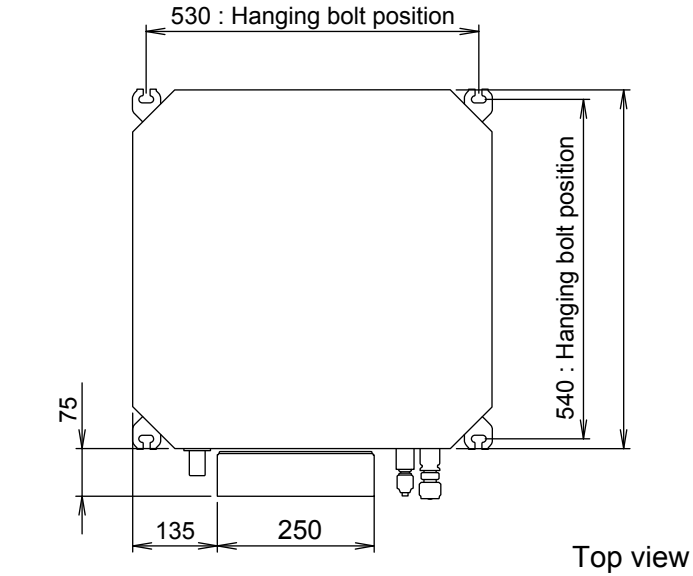

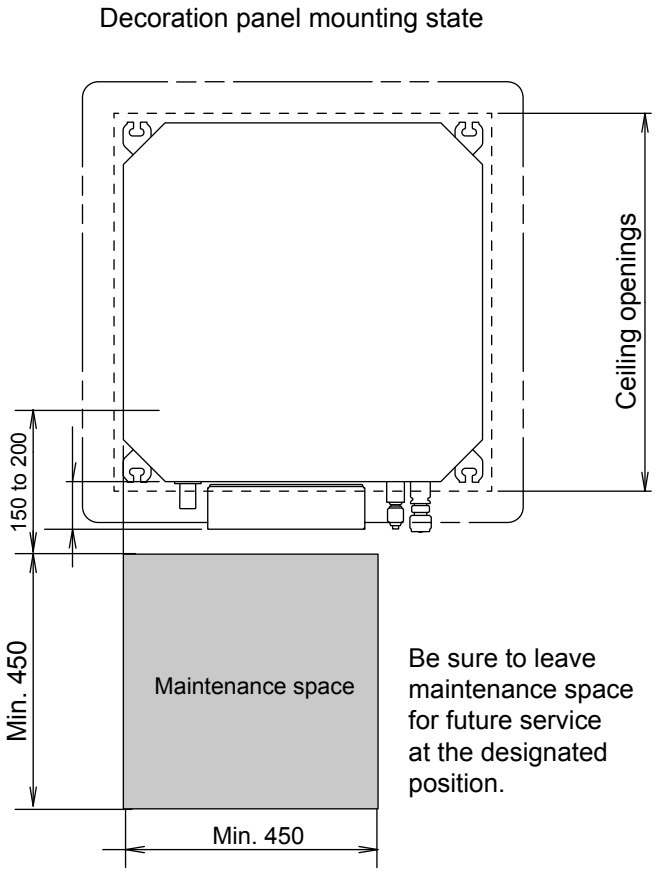

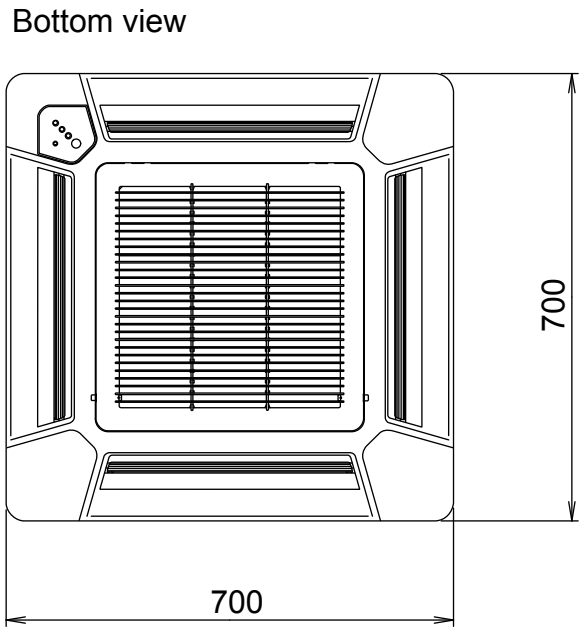

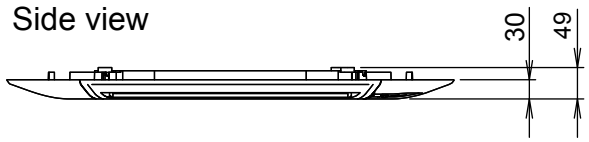

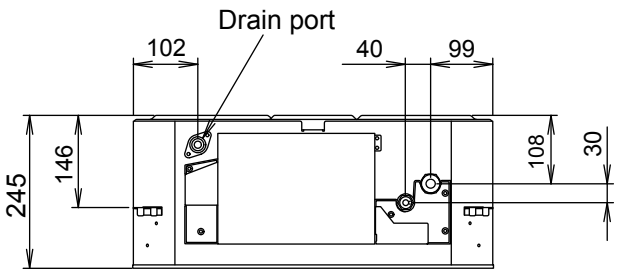

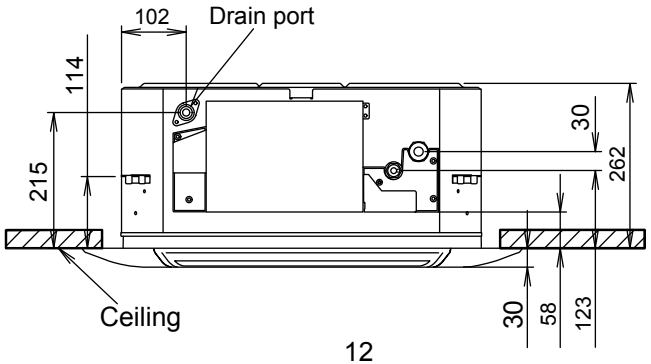

INDOOR UNIT
FLOOR
AGYG09LVCA
AGYG12LVCA

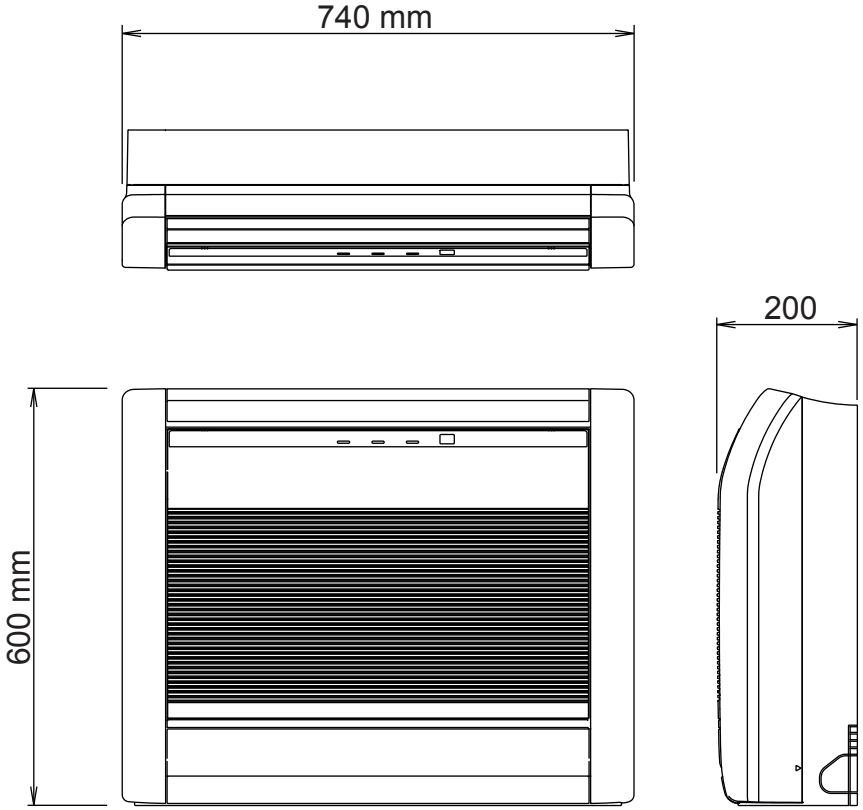

Unit : mm

INDOOR UNIT
SLIM DUCT
ARYG07LLTA
ARYG09LLTA
ARYG12LLTA
ARYG12LLTB
(Serial number : T)

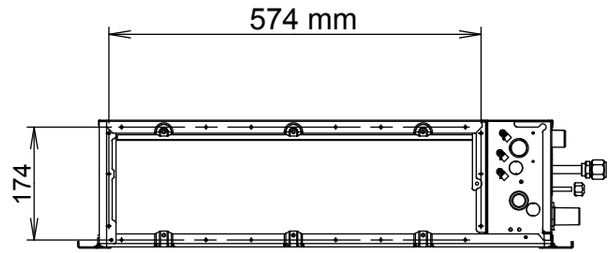

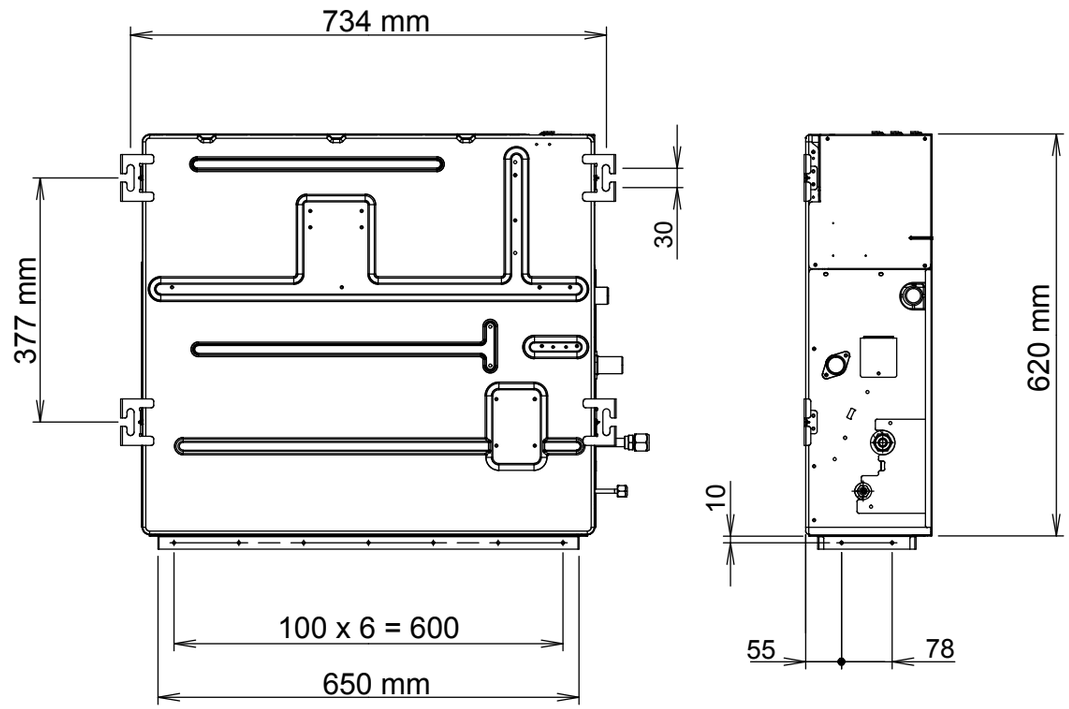

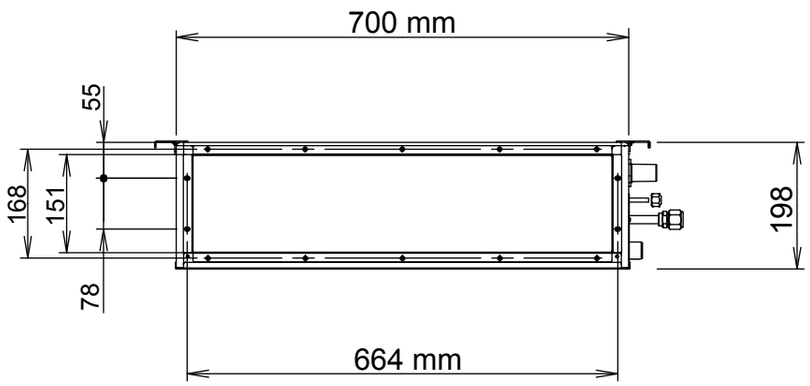

Unit : mm

INDOOR UNIT
SLIM DUCT
ARYG07LLTA
ARYG09LLTA
ARYG12LLTB
(Serial number : R)

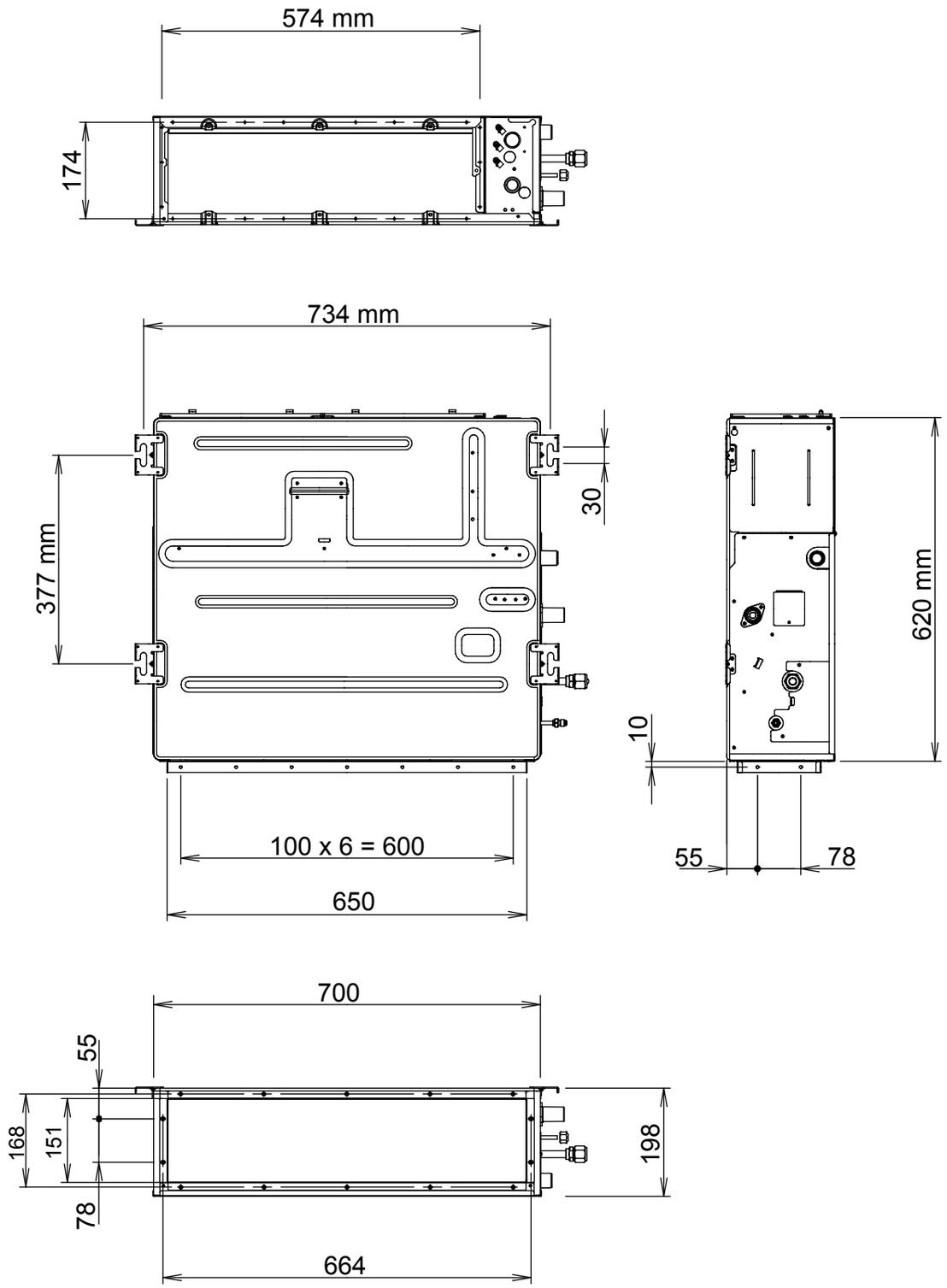

REFRIGERANT SYSTEM DIAGRAM

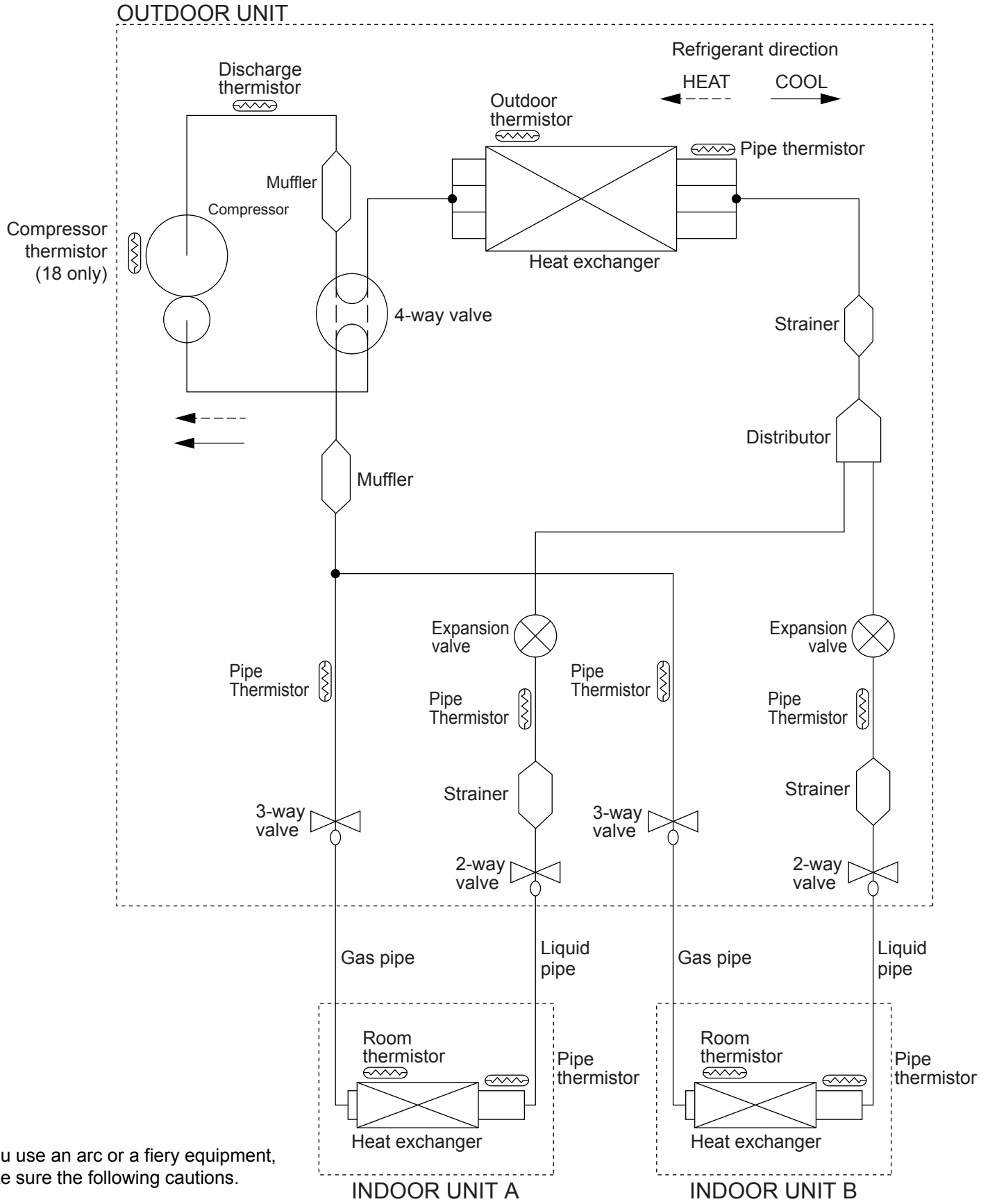

If you use an arc or a fiery equipment, make sure the following cautions.

CAUTION

(1) The room must be thoroughly ventilated.
All windows and doors are open.
(2) If you have any, use a mechanical ventilation.
(3) An other person is necessary for observation or assistance.
(4) Keep protective equipments and extinguishing apparatus within your reach.
(5) Welding and brazing must be carried out by qualified specialists.

CIRCUIT DIAGRAM

OUTDOOR UNIT
AOYG14LAC2

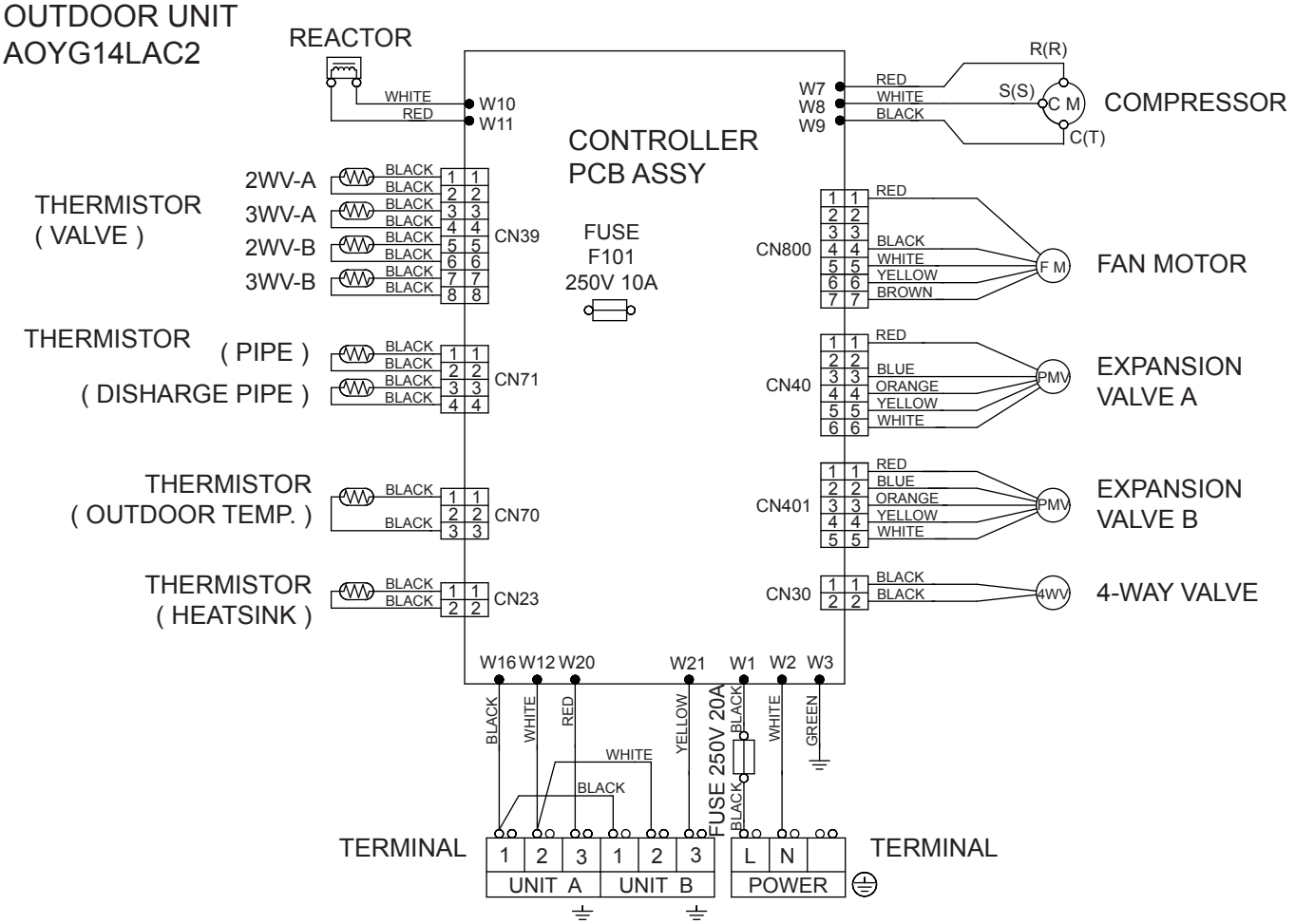

AOYG18LAC2

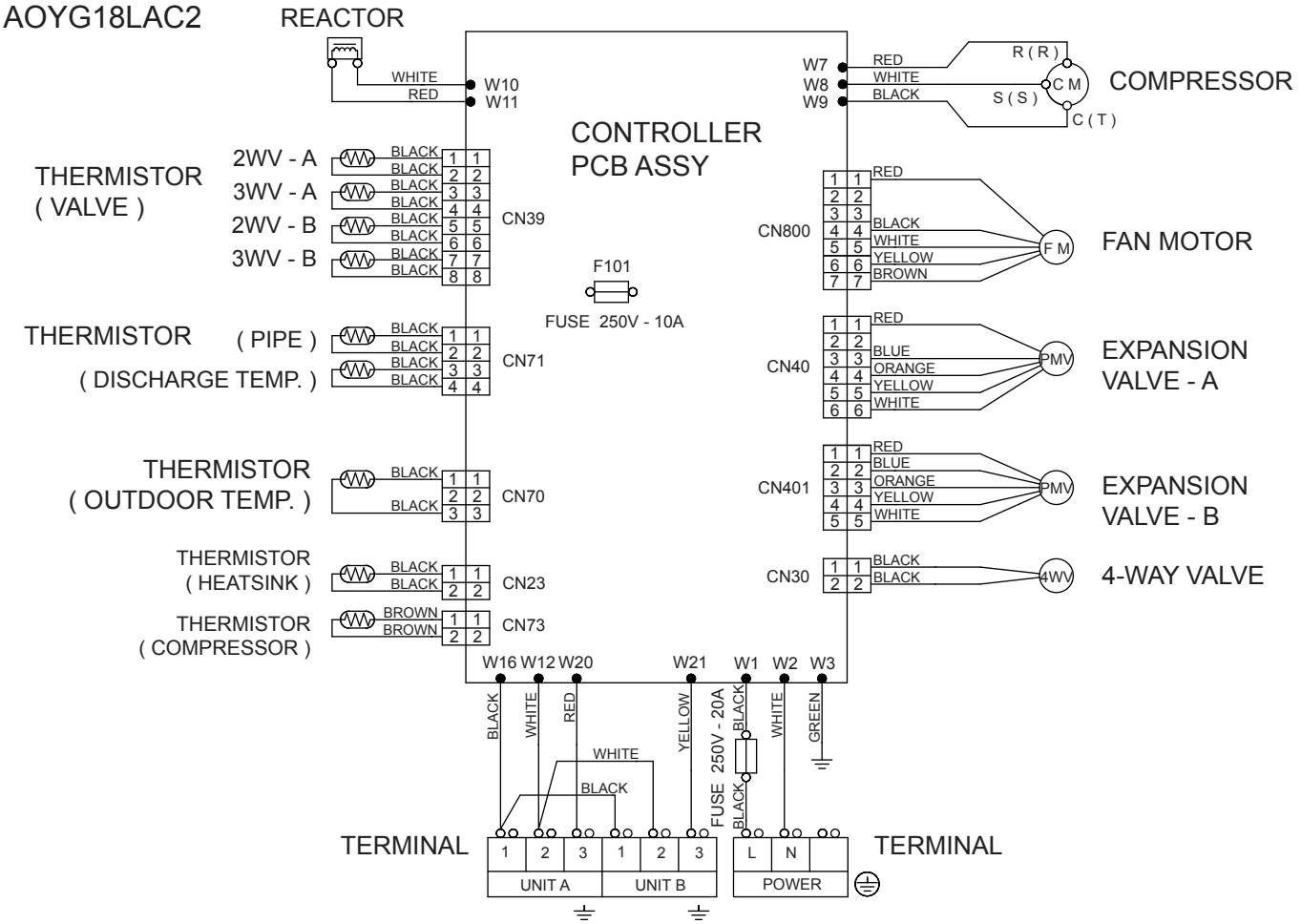

INDOOR UNIT
COMPACT WALL MOUNTED
ASYG07LJCA
ASYG09LJCA
ASYG12LJCA

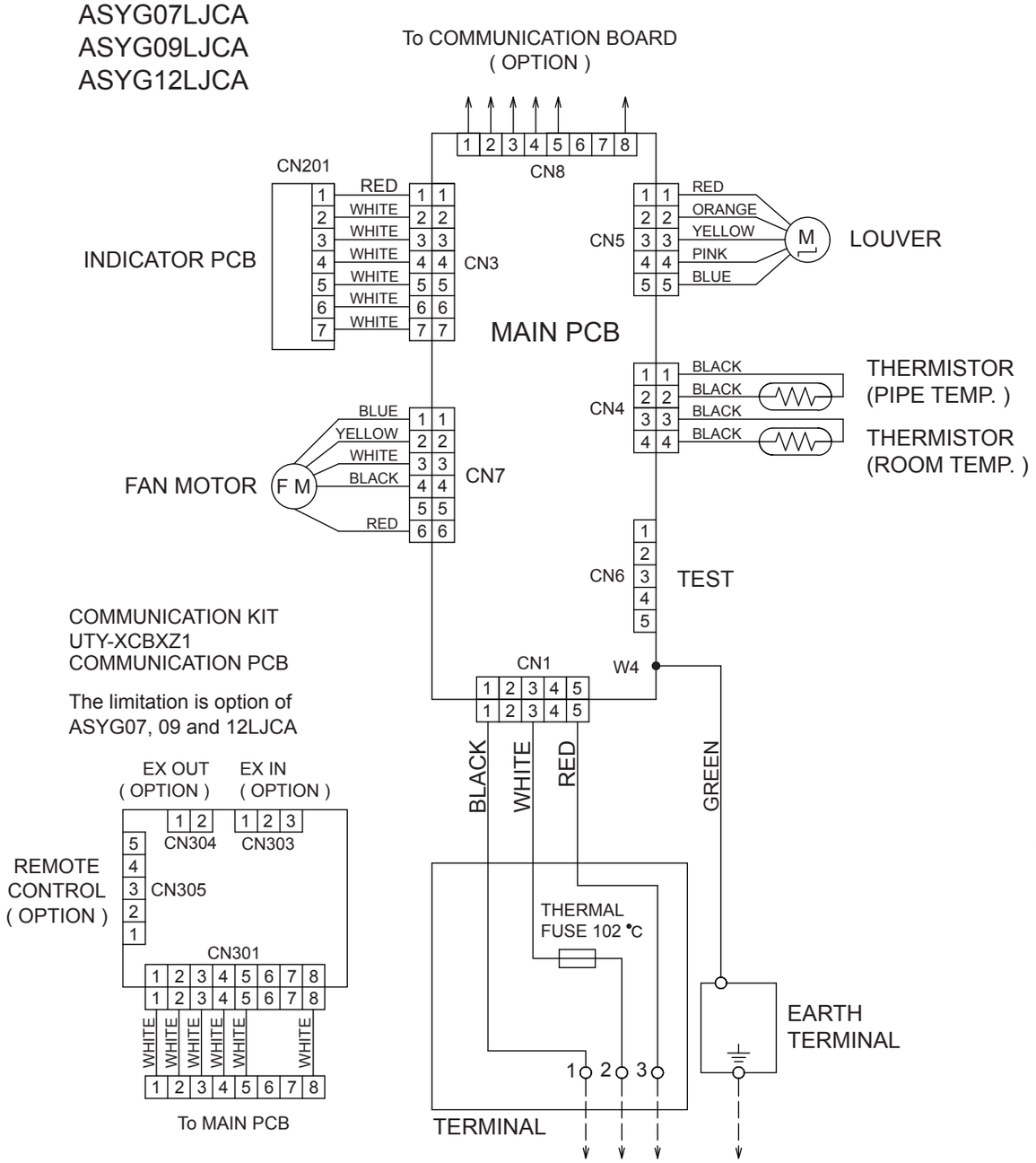

INDOOR UNIT
COMPACT WALL MOUNTED
ASYG07LUCA
ASYG09LUCA
ASYG12LUCA
ASYG14LUCA

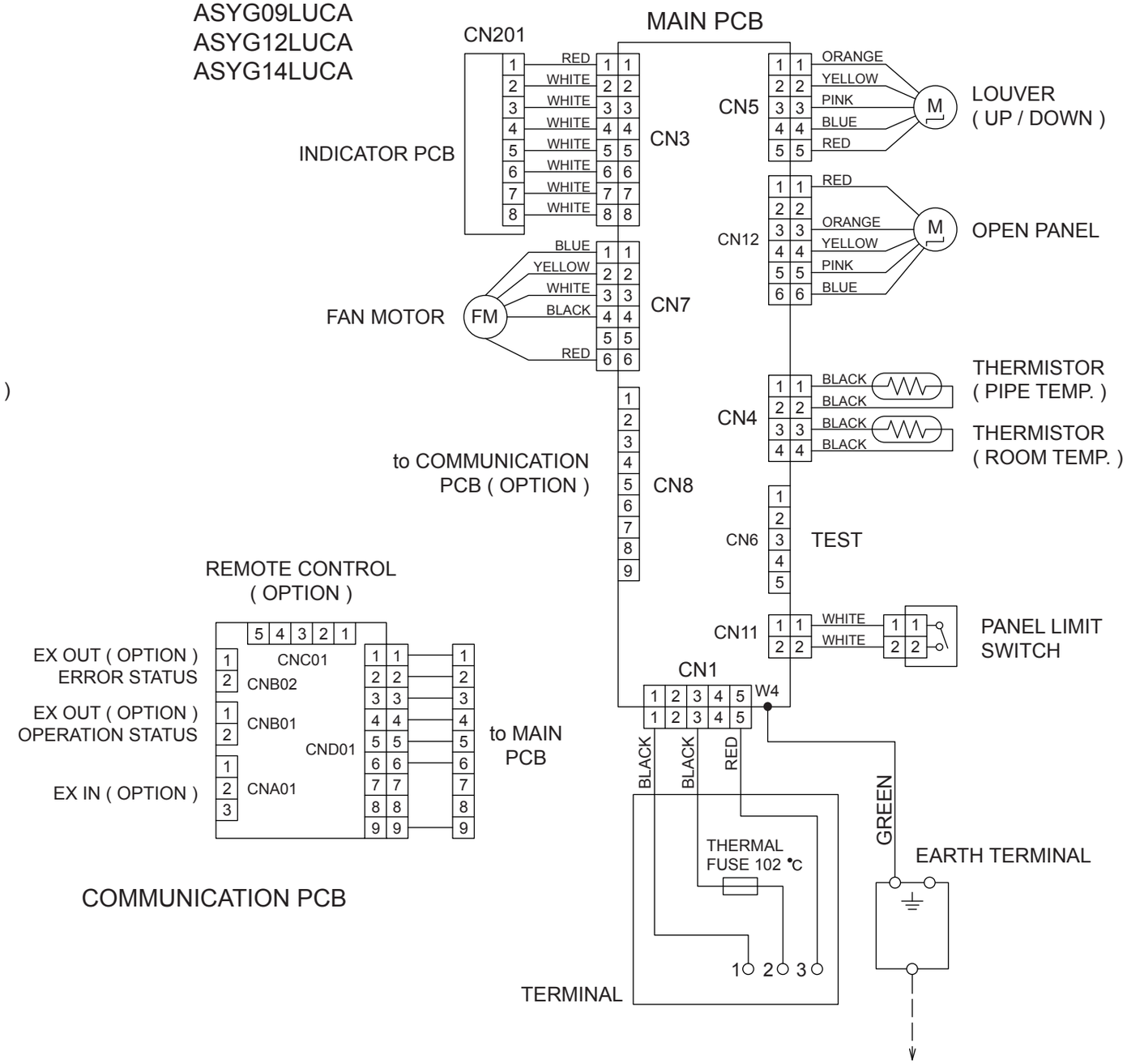

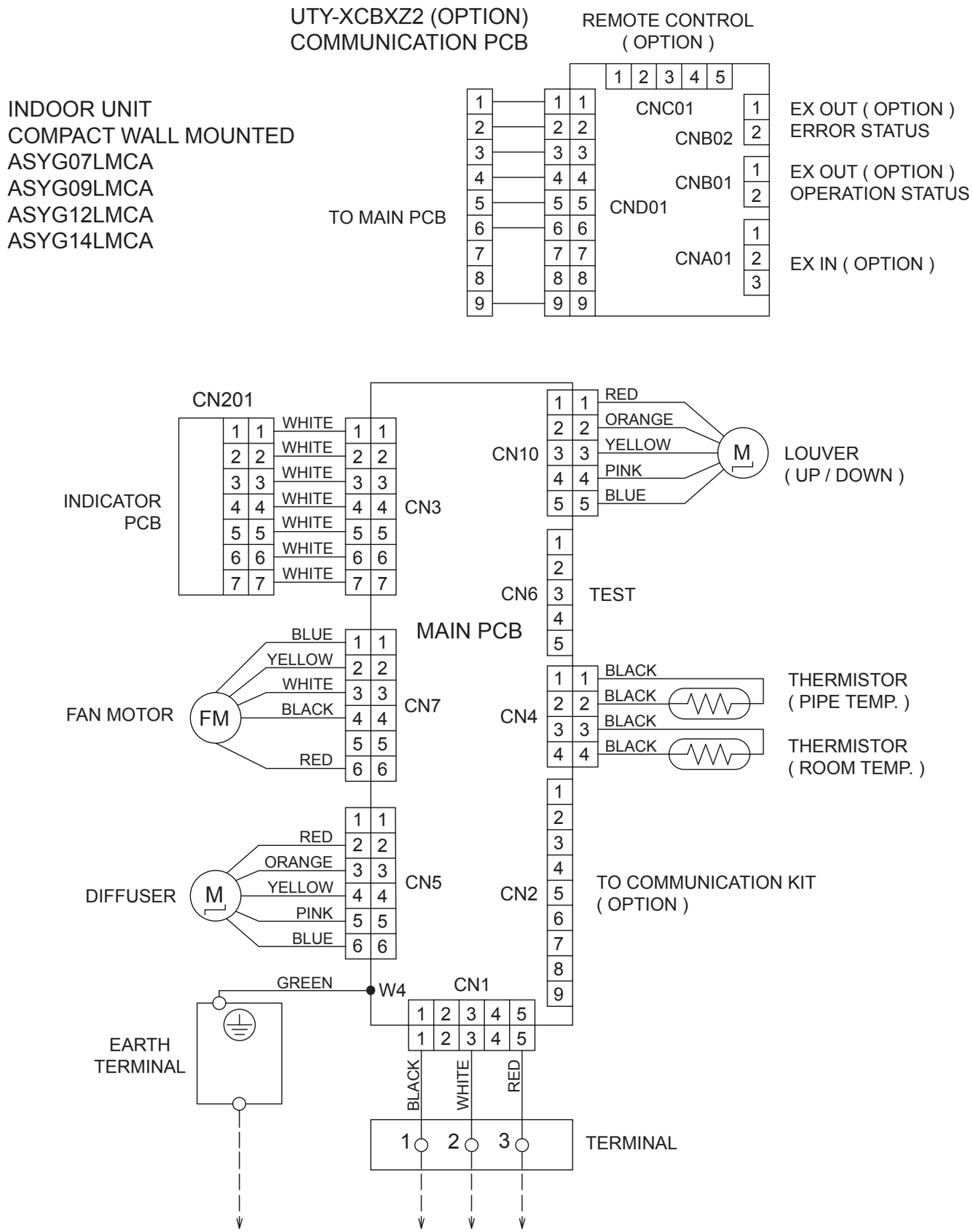
UTY-XCBXZ2 (OPTION)
COMMUNICATION PCB
REMOTE CONTROL
(OPTION)
INDOOR UNIT
COMPACT WALL MOUNTED
ASYG07LMCA
ASYG09LMCA
ASYG12LMCA
ASYG14LMCA
TO MAIN PCB
CNC01
CNB02
CNB01
CND01
CNA01
EX OUT (OPTION)
ERROR STATUS
EX OUT (OPTION)
OPERATION STATUS
EX IN (OPTION)
CN201
INDICATOR
PCB
WHITE
CN3
CN10
RED
ORANGE
YELLOW
PINK
BLUE
M
LOUVER
(UP / DOWN)
CN6
TEST
MAIN PCB
BLUE
YELLOW
WHITE
BLACK
RED
FAN MOTOR
FM
CN7
CN4
BLACK
THERMISTOR
(PIPE TEMP.)
THERMISTOR
(ROOM TEMP.)
DIFFUSER
CN5
CN2
TO COMMUNICATION KIT
(OPTION)
GREEN
W4
CN1
EARTH
TERMINAL
TERMINAL

INDOOR UNIT
COMPACT CASSETTE
AUYG07LVLA
AUYG09LVLA
AUYG12LVLA
AUYG12LVLB

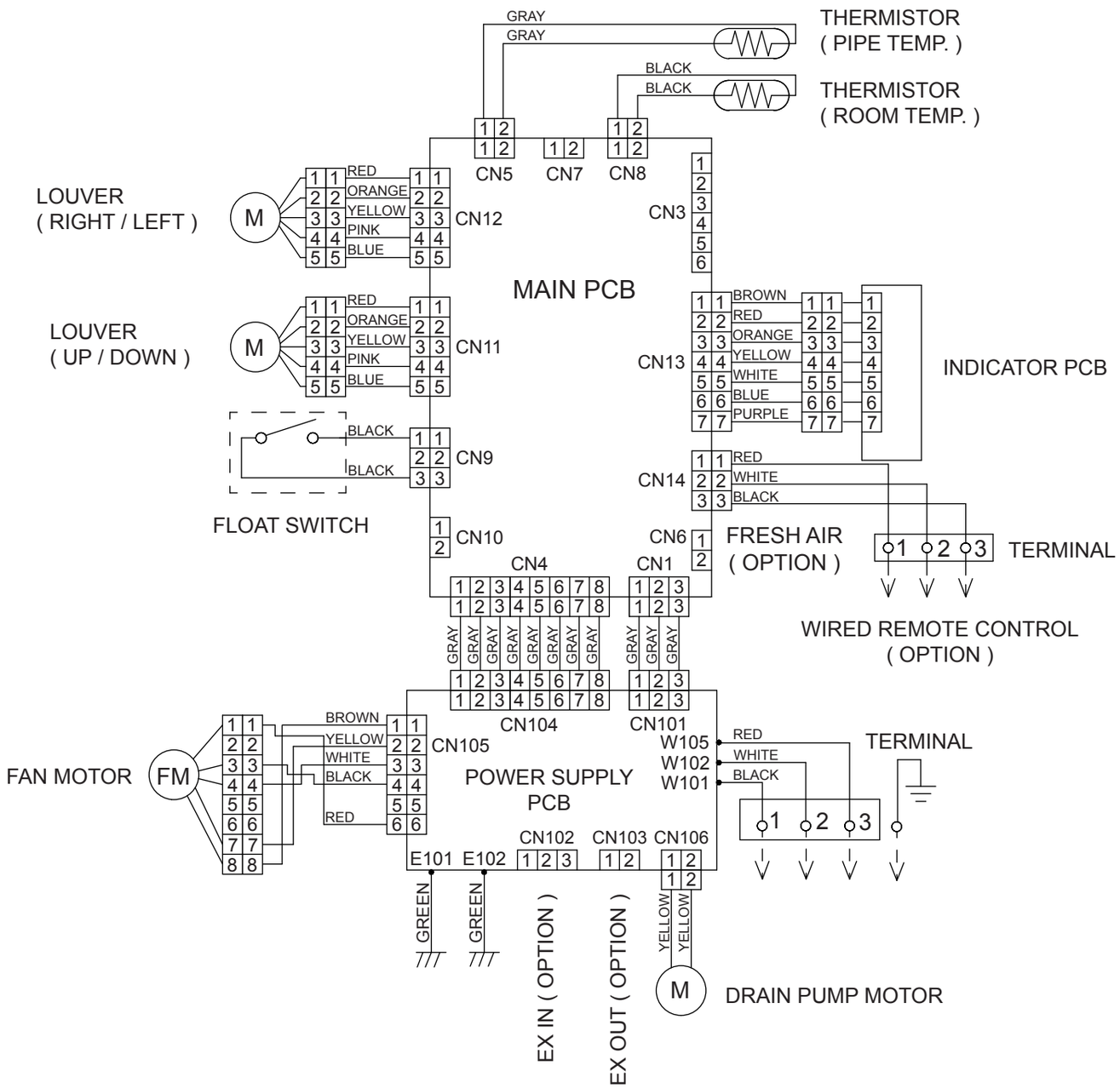

INDOOR UNIT
FLOOR
AGYG09LVCA
AGYG12LVCA

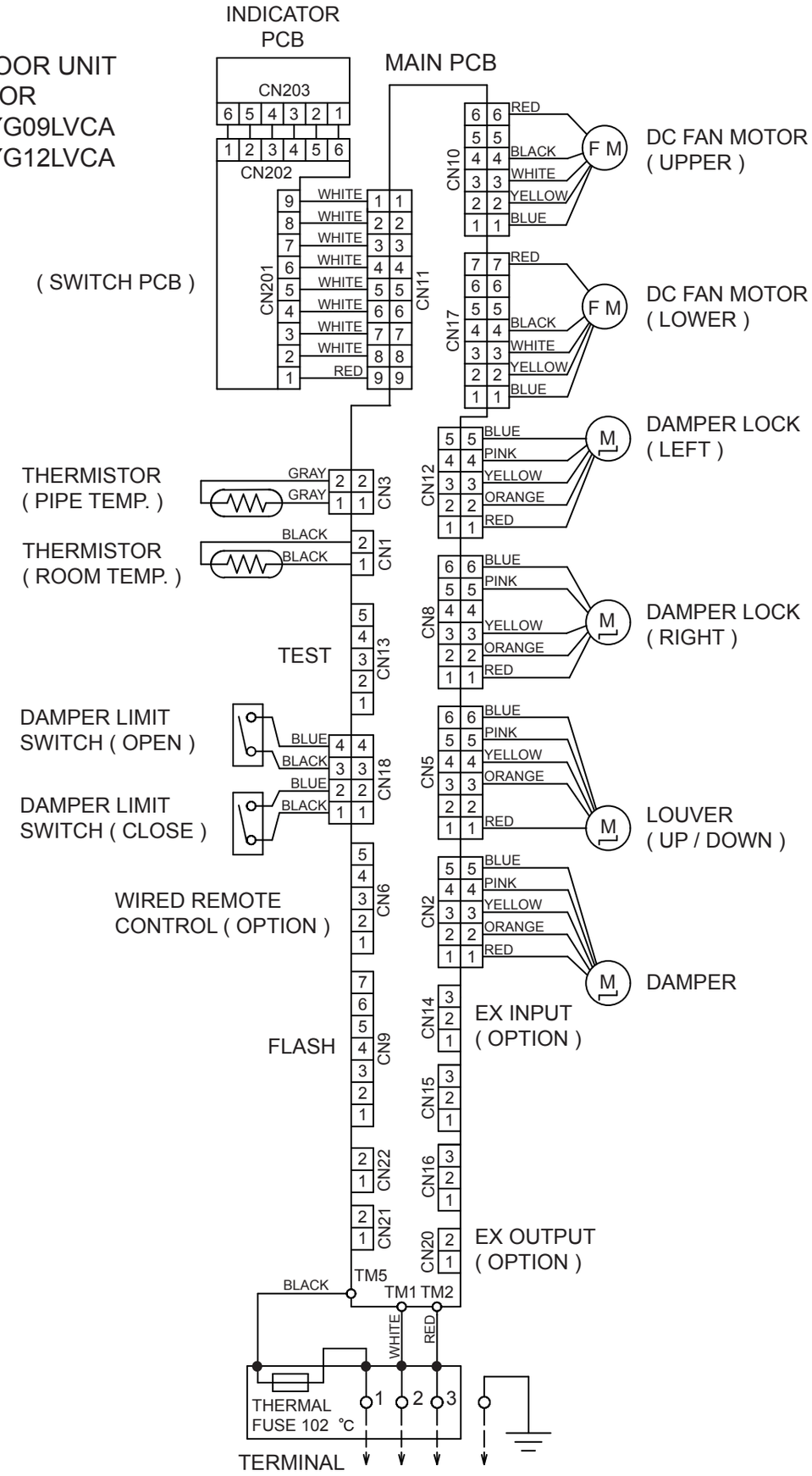

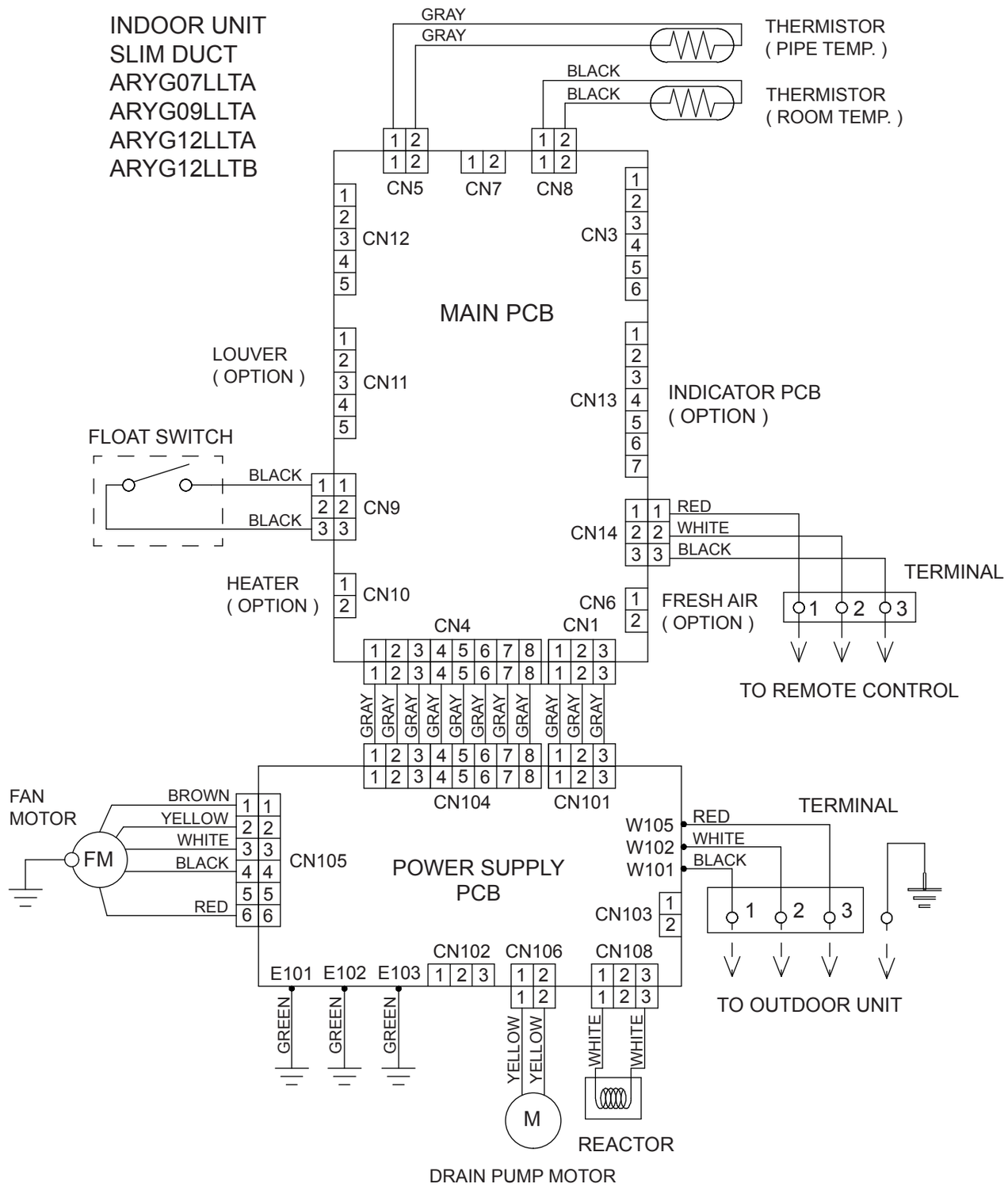
INDOOR UNIT
SLIM DUCT
ARYG07LLTA
ARYG09LLTA
ARYG12LLTA
ARYG12LLTB
GRAY
GRAY
THERMISTOR
(PIPE TEMP.)
BLACK
BLACK
THERMISTOR
(ROOM TEMP.)
CN5
CN7
CN8
CN12
CN3
MAIN PCB
LOUVER
(OPTION)
CN11
CN13
INDICATOR PCB
(OPTION)
FLOAT SWITCH
BLACK
BLACK
CN9
CN14
RED
WHITE
BLACK
TERMINAL
HEATER
(OPTION)
CN10
CN6
FRESH AIR
(OPTION)
CN4
CN1
TO REMOTE CONTROL
GRAY
CN104
CN101
FAN
MOTOR
BROWN
YELLOW
WHITE
BLACK
RED
FM
CN105
POWER SUPPLY
PCB
W105
W102
W101
RED
WHITE
BLACK
TERMINAL
CN103
CN102
CN106
CN108
E101
E102
E103
GREEN
GREEN
GREEN
YELLOW
YELLOW
WHITE
WHITE
M
REACTOR
DRAIN PUMP MOTOR
TO OUTDOOR UNIT

OUTDOOR PCB CIRCUIT DIAGRAM

AOYG14LAC2
INVERTER ASSEMBLY
EZ-0121THUE

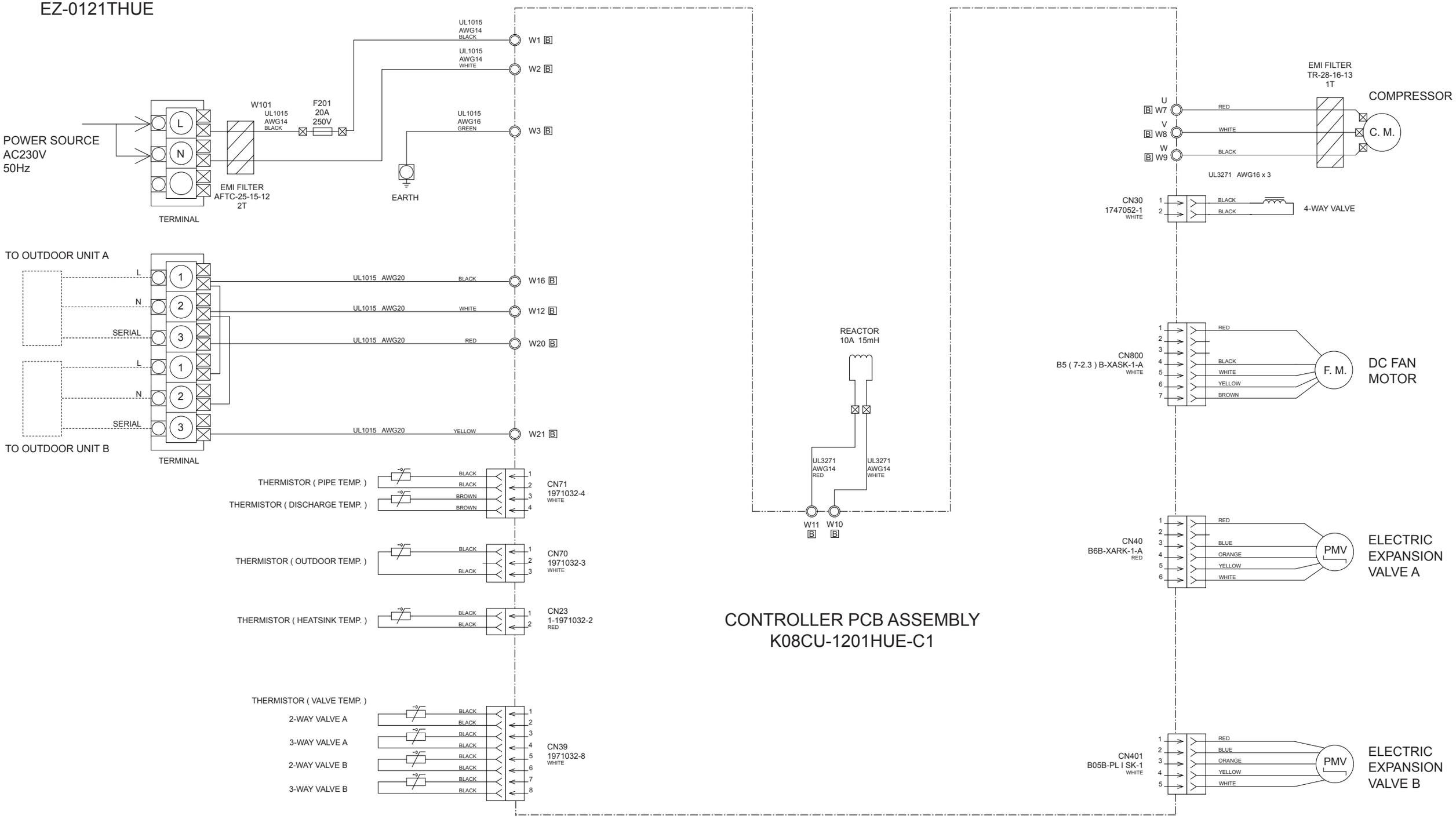

OUTDOOR UNIT
AOYG14LAC2

CONTROLLER PCB ASSEMBLY (MAIN PCB)
K08CU-1201HUE-C1

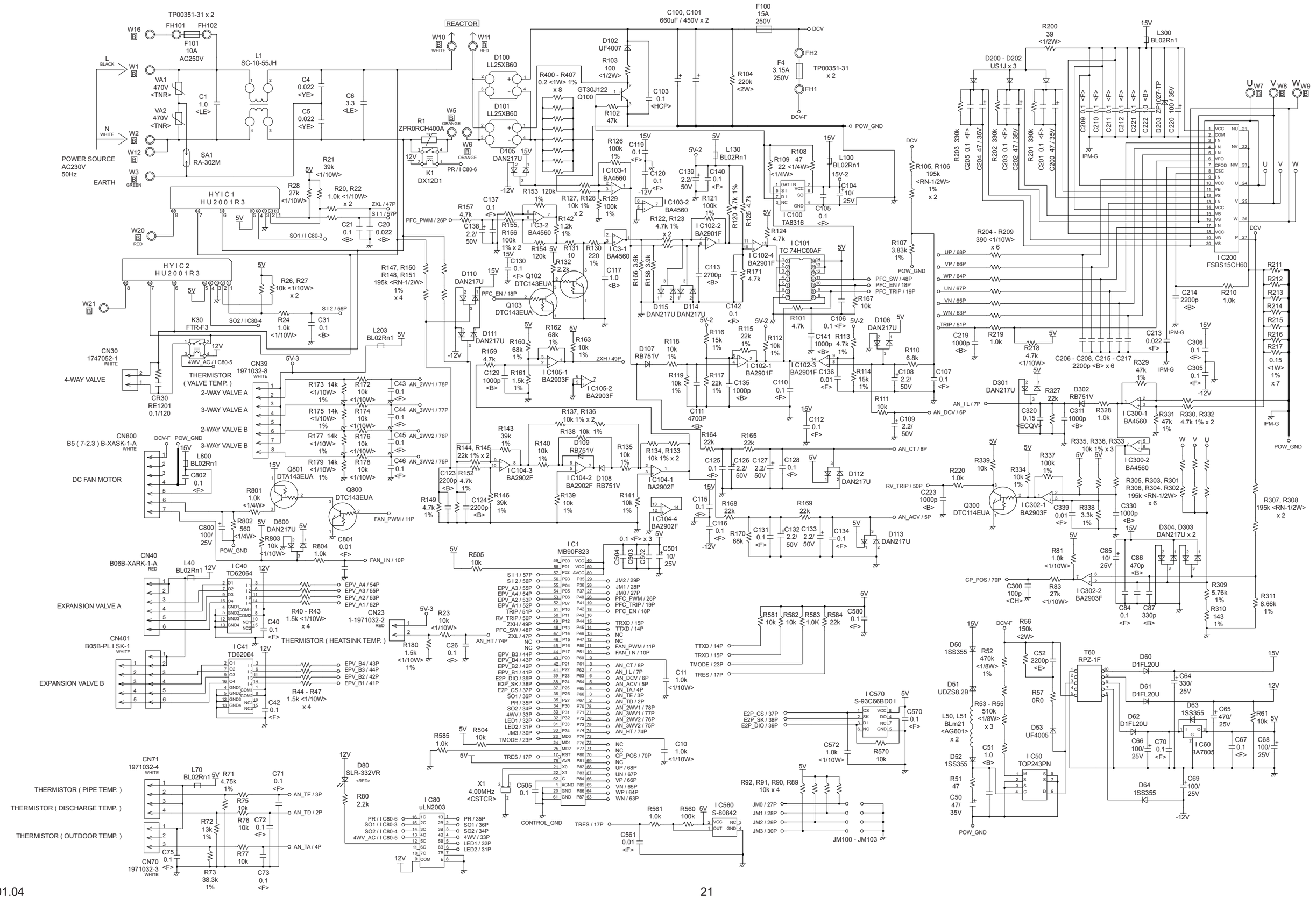

OUTDOOR UNIT
AOYG18LAC2
INVERTER ASSEMBLY
EZ-0121WHUE

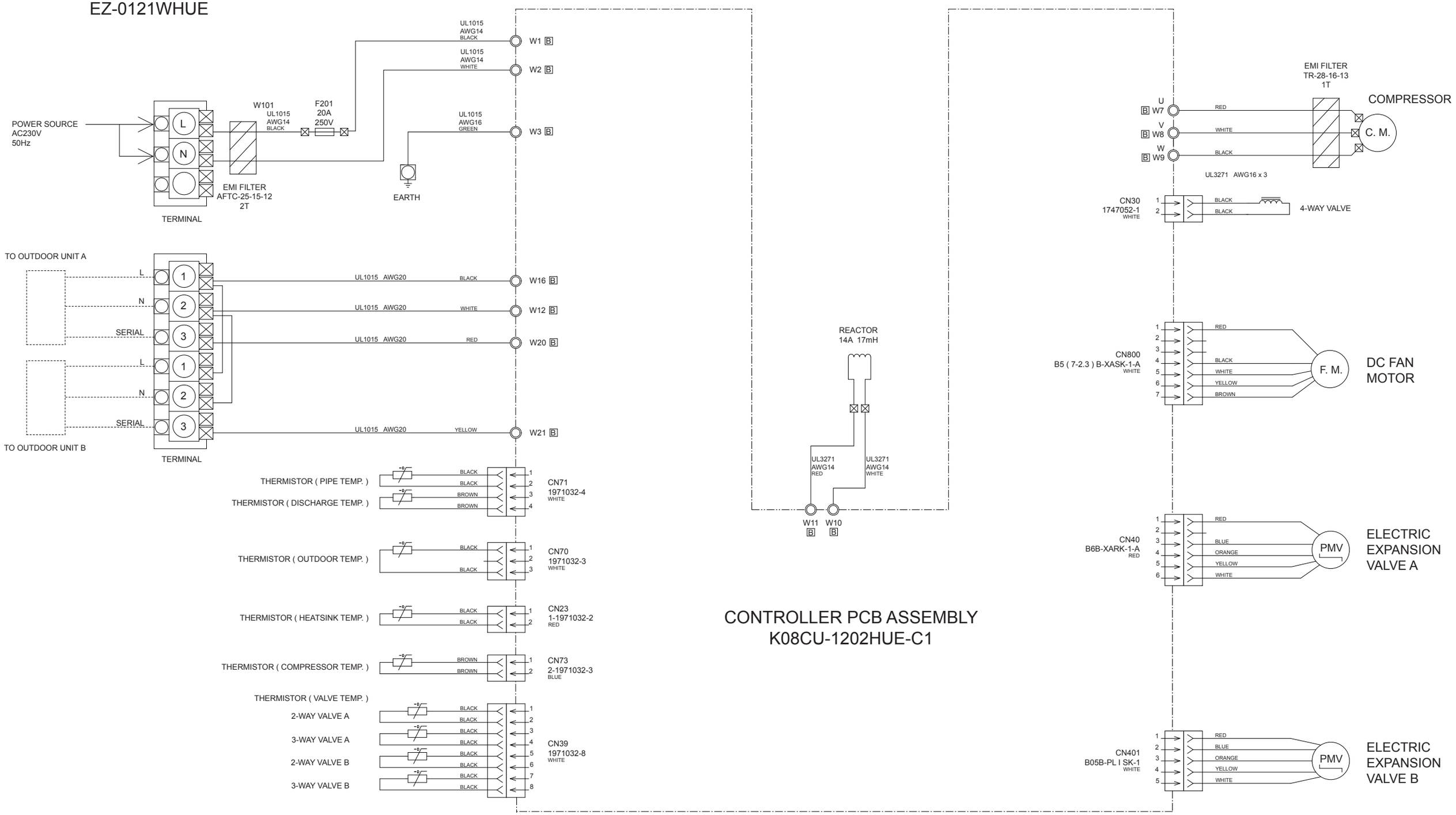

OUTDOOR UNIT
AOYG18LAC2

CONTROLLER PCB ASSEMBLY
K08CU-1202HUE-C1

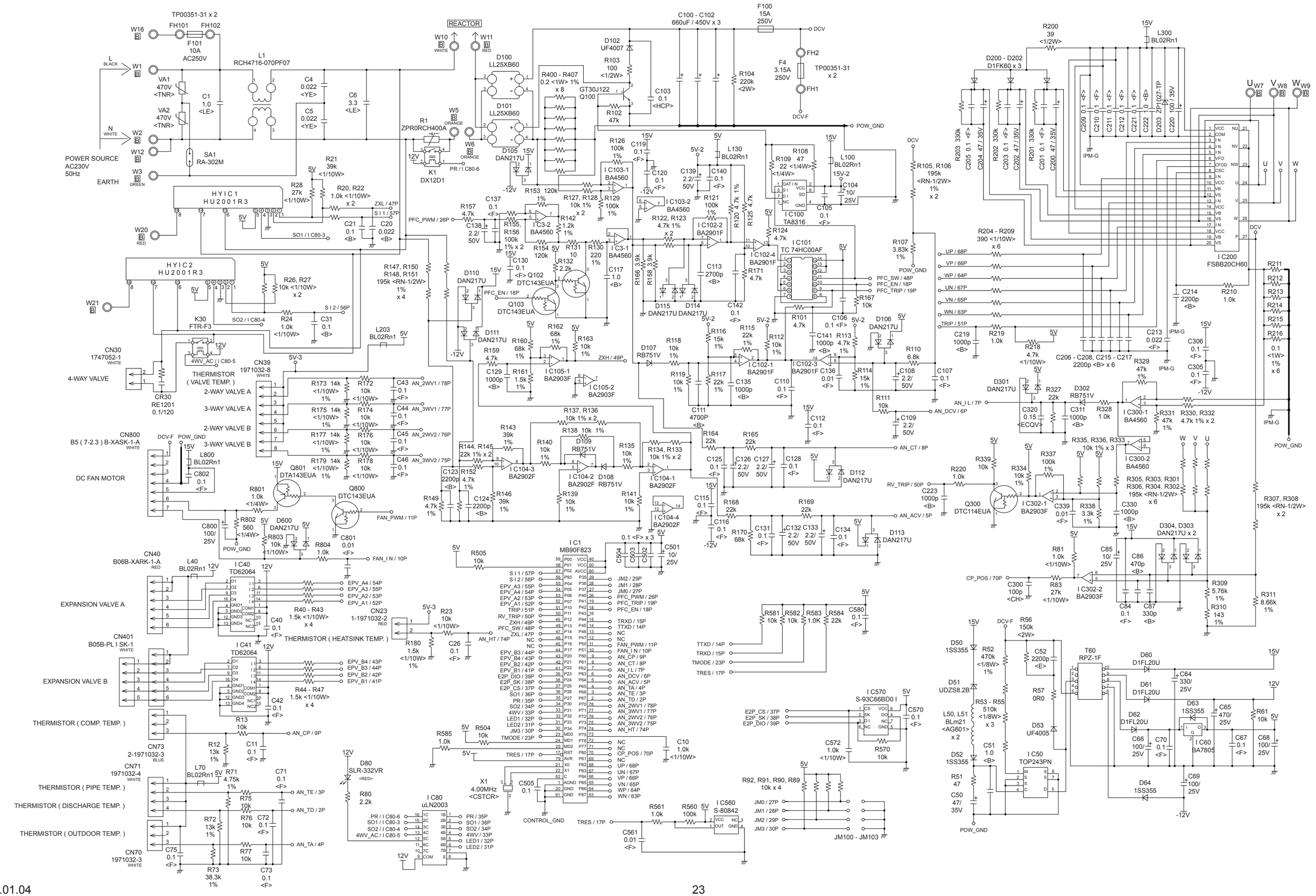

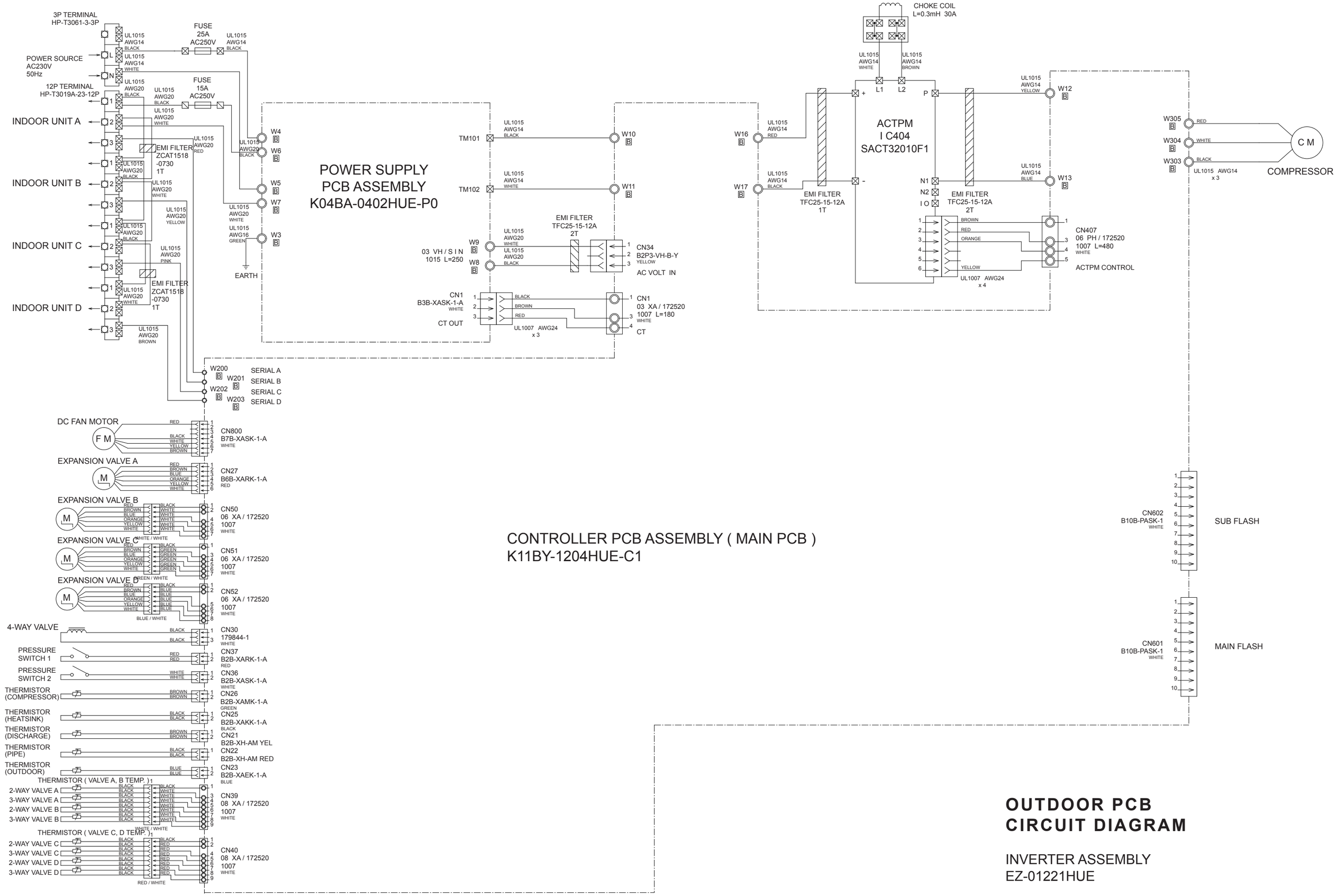

OUTDOOR PCB CIRCUIT DIAGRAM

INVERTER ASSEMBLY
EZ-01221HUE

OUTDOOR UNIT
CONTROLLER PCB ASSEMBLY (MAIN PCB)
K11BY-1204HUE-C1

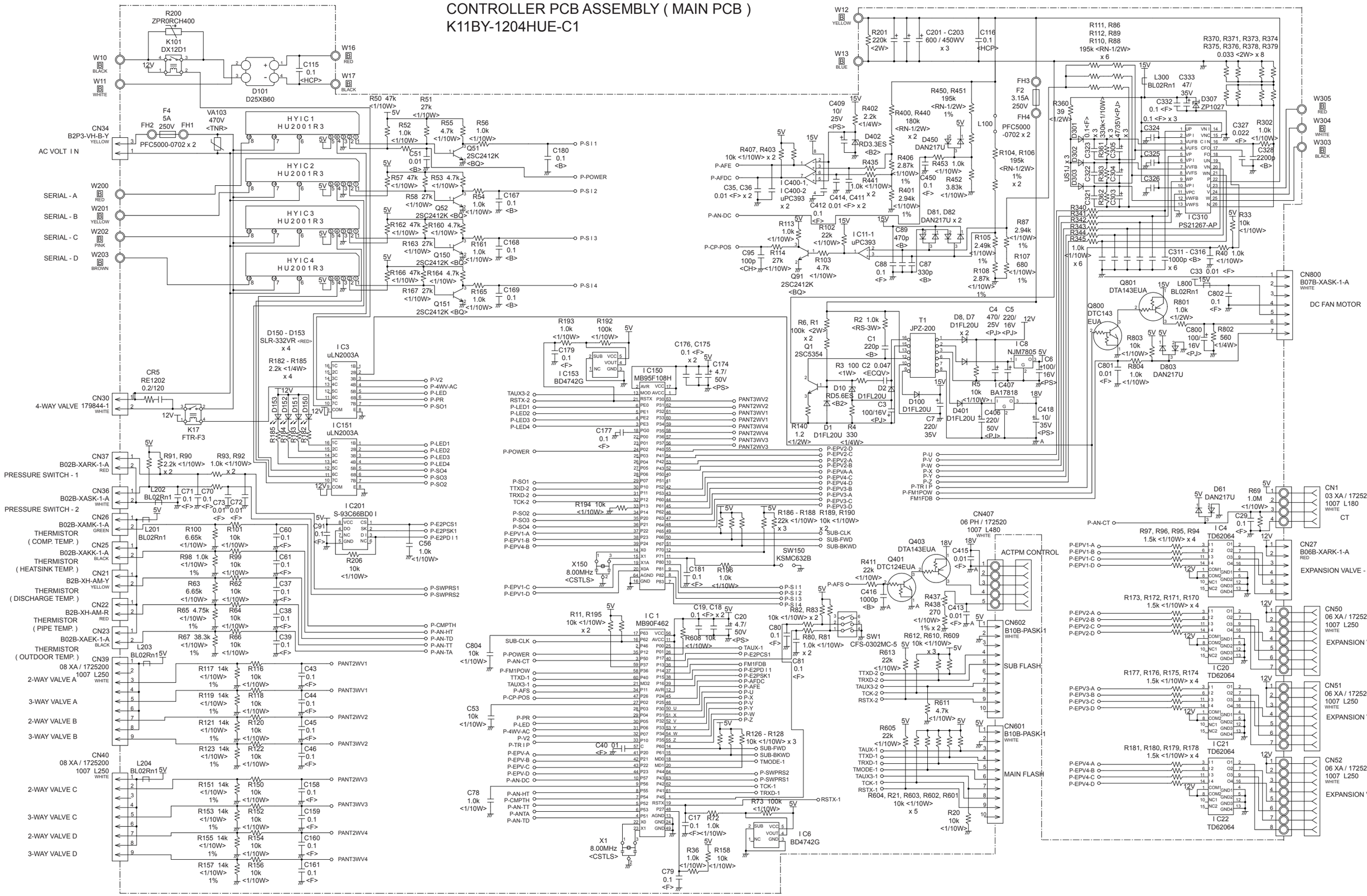

OUTDOOR UNIT
POWER SUPPLY PCB ASSEMBLY
K04BA-0402HUE-P0

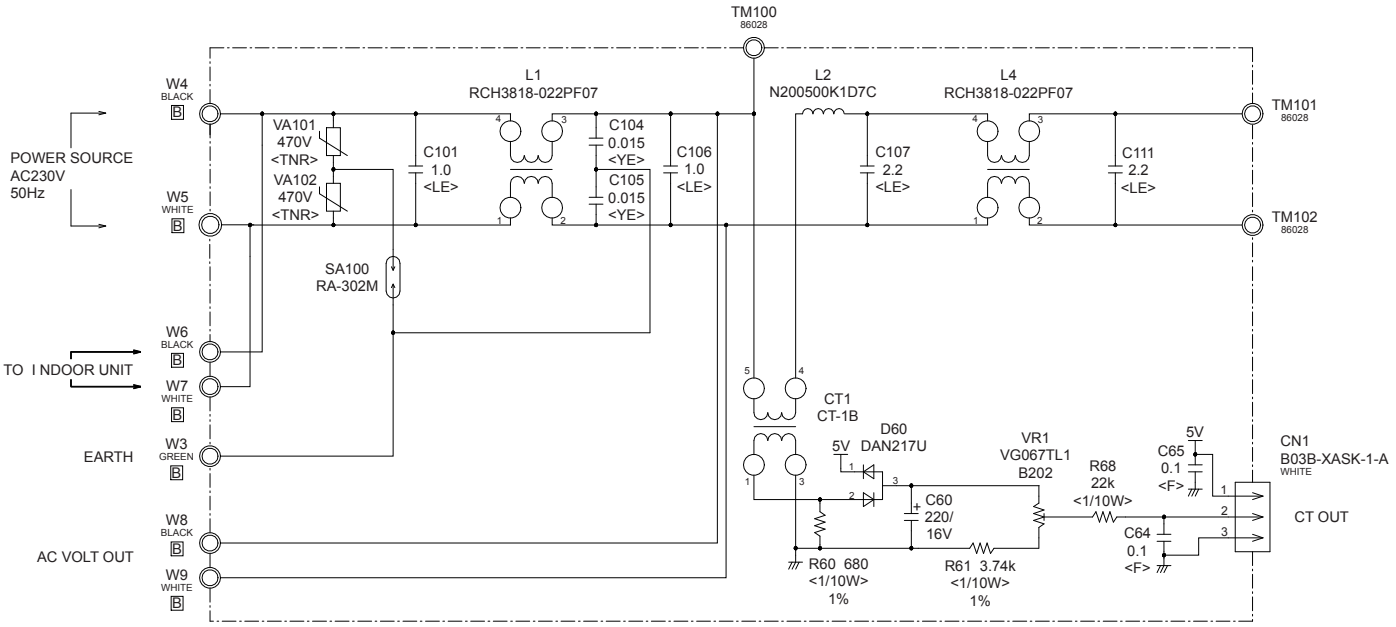

INDOOR PCB CIRCUIT DIAGRAM

COMPACT WALL MOUNTED
CONTROL UNIT
ASYG07LJCA : EZ-01235HSE
ASYG09LJCA : EZ-01236HSE
ASYG12LJCA : EZ-01237HSE

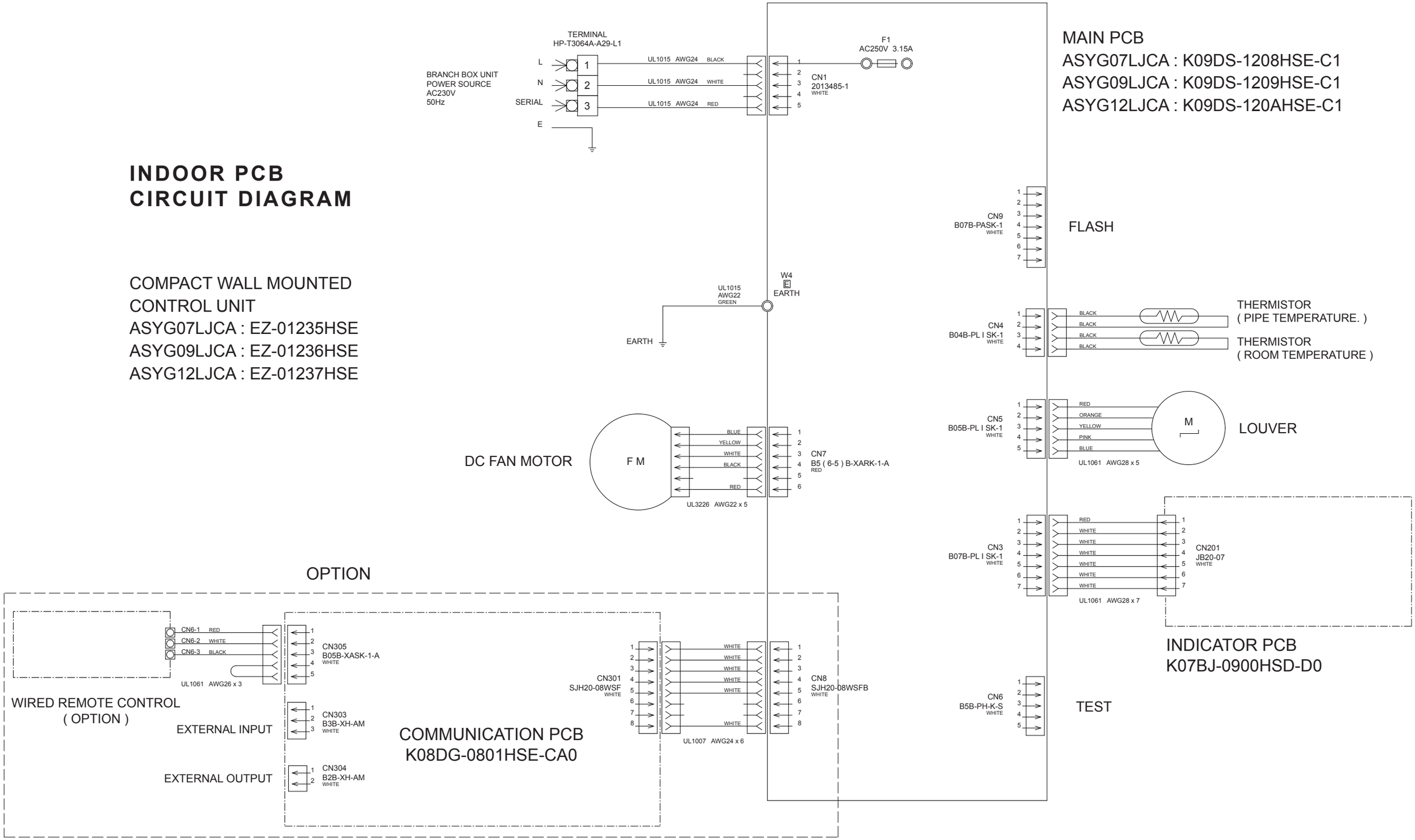

INDOOR UNIT
COMPACT WALL MOUNTED
MAIN PCB
ASYG07LJCA : K09DS-1208HSE-C1
ASYG09LJCA : K09DS-1209HSE-C1
ASYG12LJCA : K09DS-120AHSE-C1

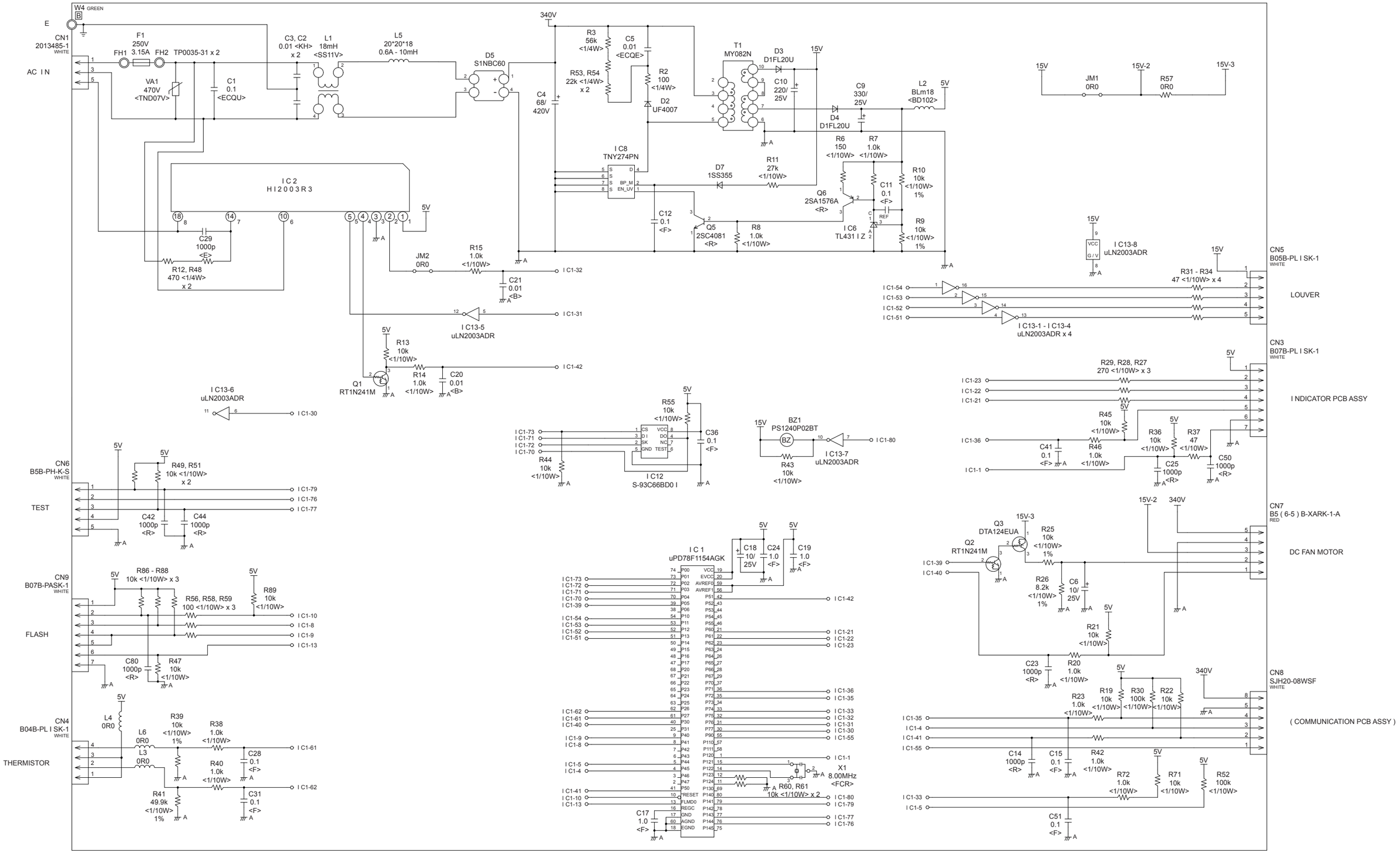

INDOOR UNIT
COMPACT WALL MOUNTED
ASYG07LJCA
ASYG09LJCA
ASYG12LJCA

INDICATOR PCB
K07BJ-0900HSD-D0

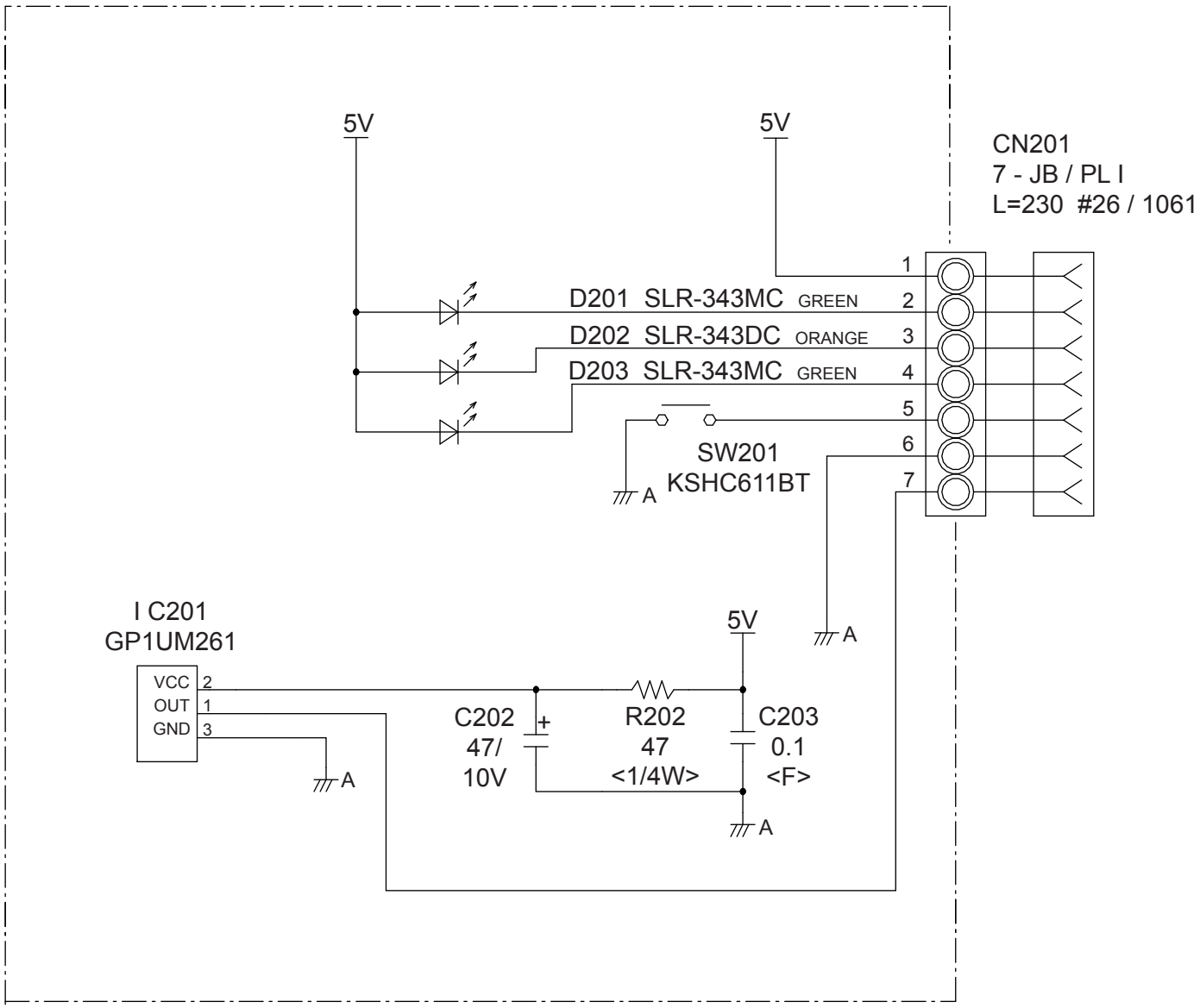

TO MAIN PCB

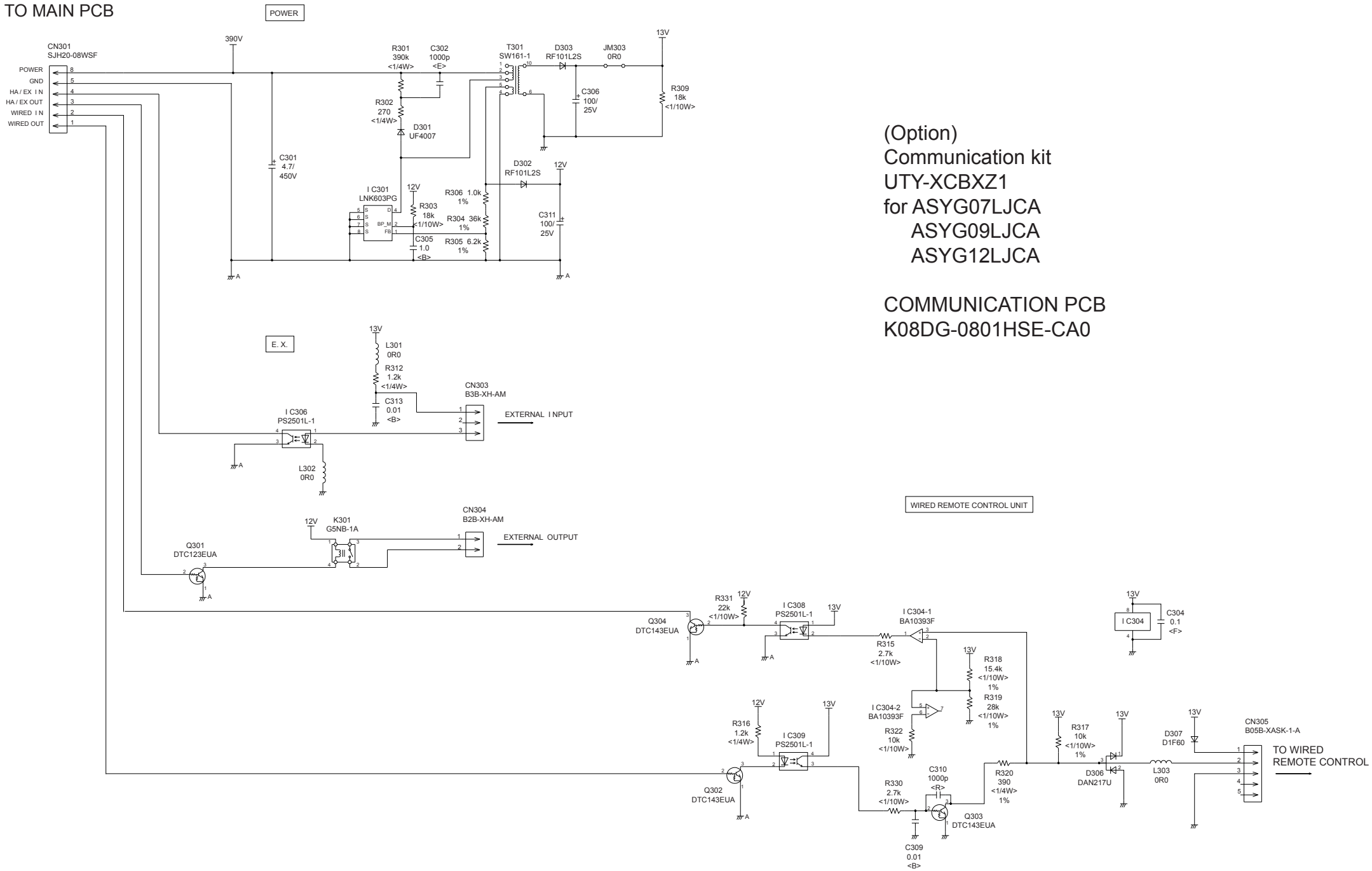

(Option)
Communication kit
UTY-XCBXZ1
for ASYG07LJCA
ASYG09LJCA
ASYG12LJCA

COMMUNICATION PCB
K08DG-0801HSE-CA0

INDOOR UNIT
COMPACT WALL MOUNTED
CONTROL UNIT
ASYG07LUCA : EZ-0121CHSE
ASYG09LUCA : EZ-0121DHSE
ASYG12LUCA : EZ-0121EHSE
ASYG14LUCA : EZ-0121FHSE

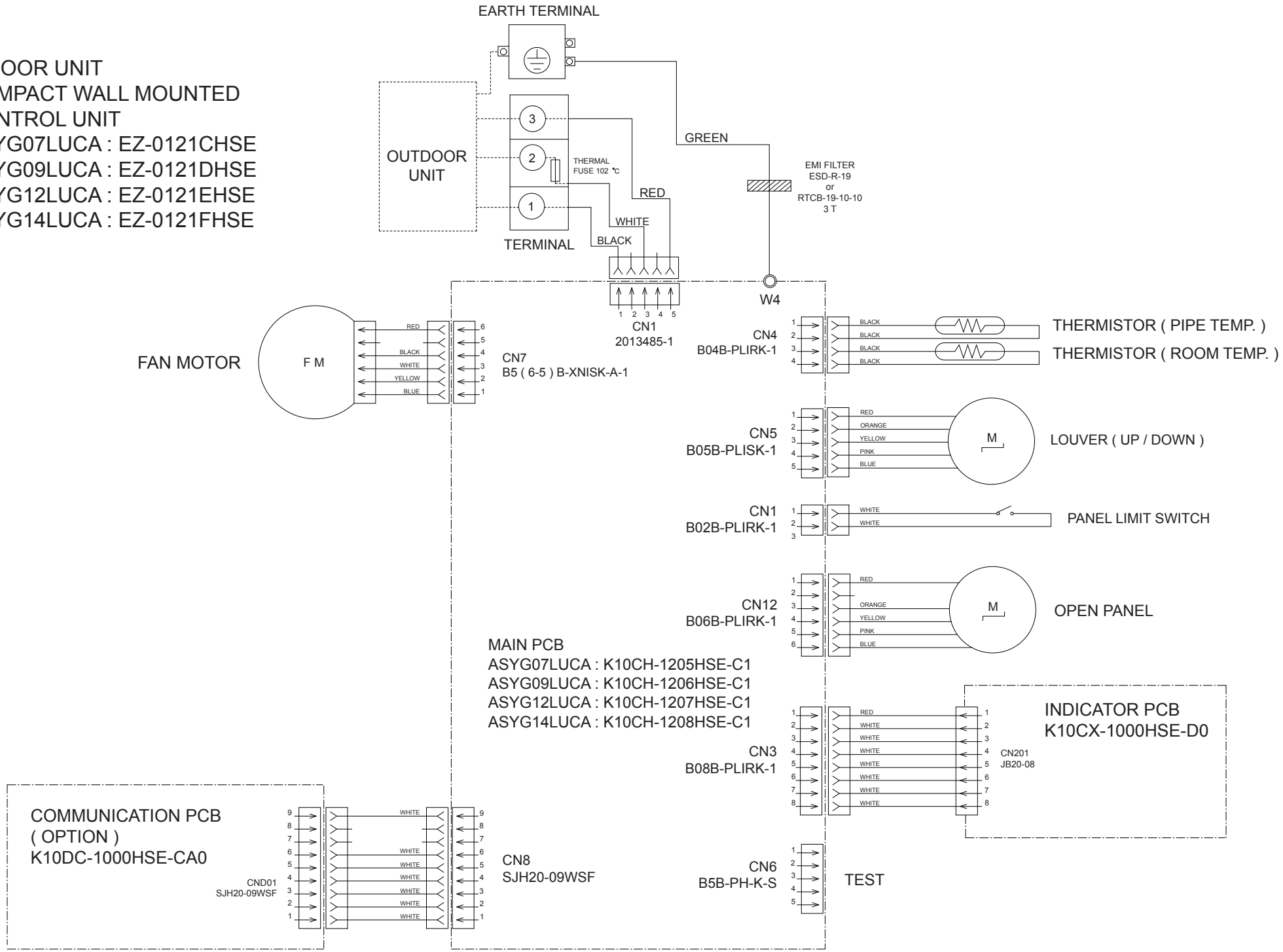

INDOOR UNIT
COMPACT WALL MOUNTED
MAIN PCB
ASYG07LUCA : K10CH-1205HSE-C1
ASYG09LUCA : K10CH-1206HSE-C1
ASYG12LUCA : K10CH-1207HSE-C1
ASYG14LUCA : K10CH-1208HSE-C1

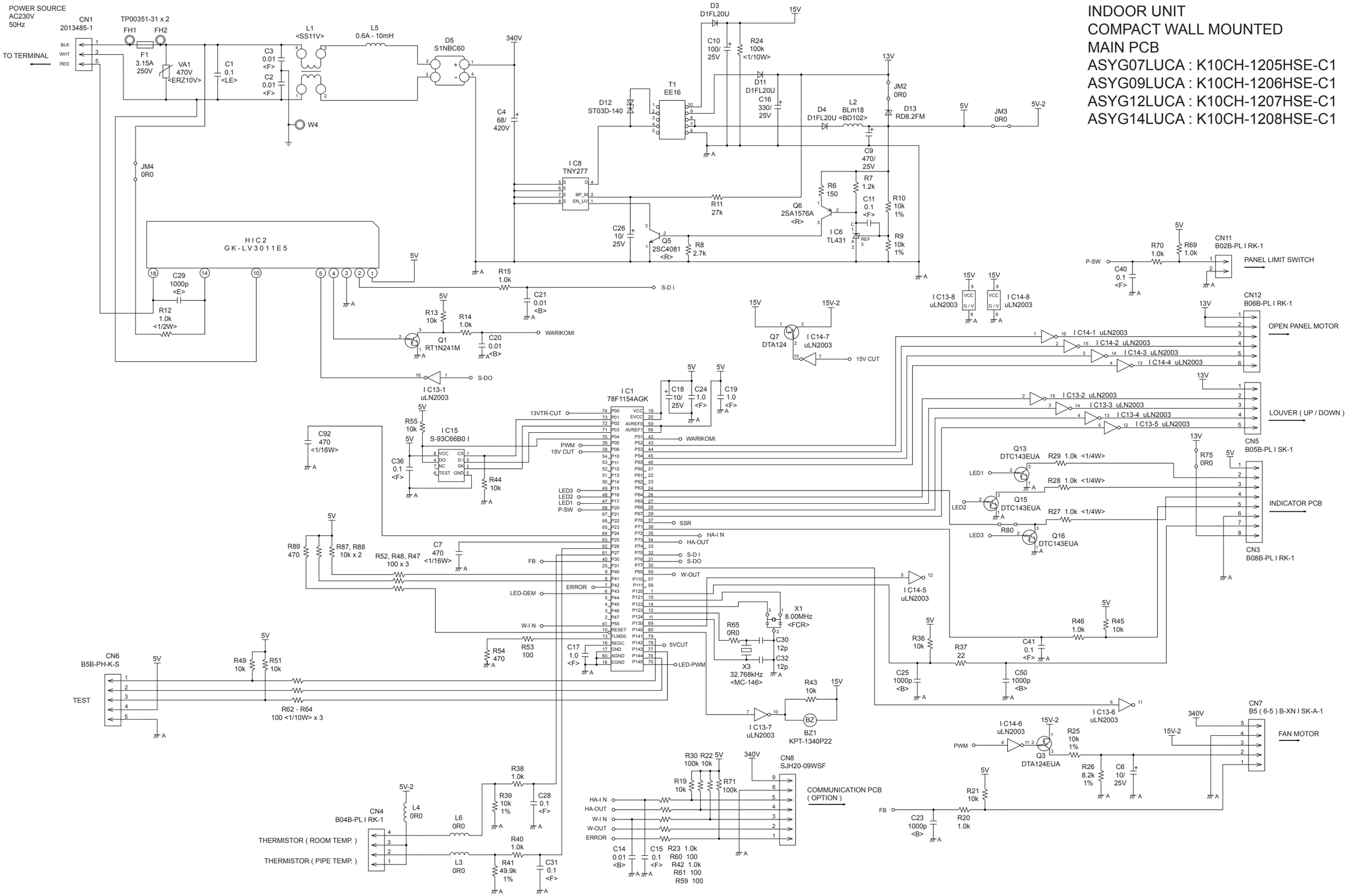

INDOOR UNIT
COMPACT WALL MOUNTED
ASYG07LUCA
ASYG09LUCA
ASYG12LUCA
ASYG14LUCA
INDICATOR PCB
K10CX-1000HSE-D0

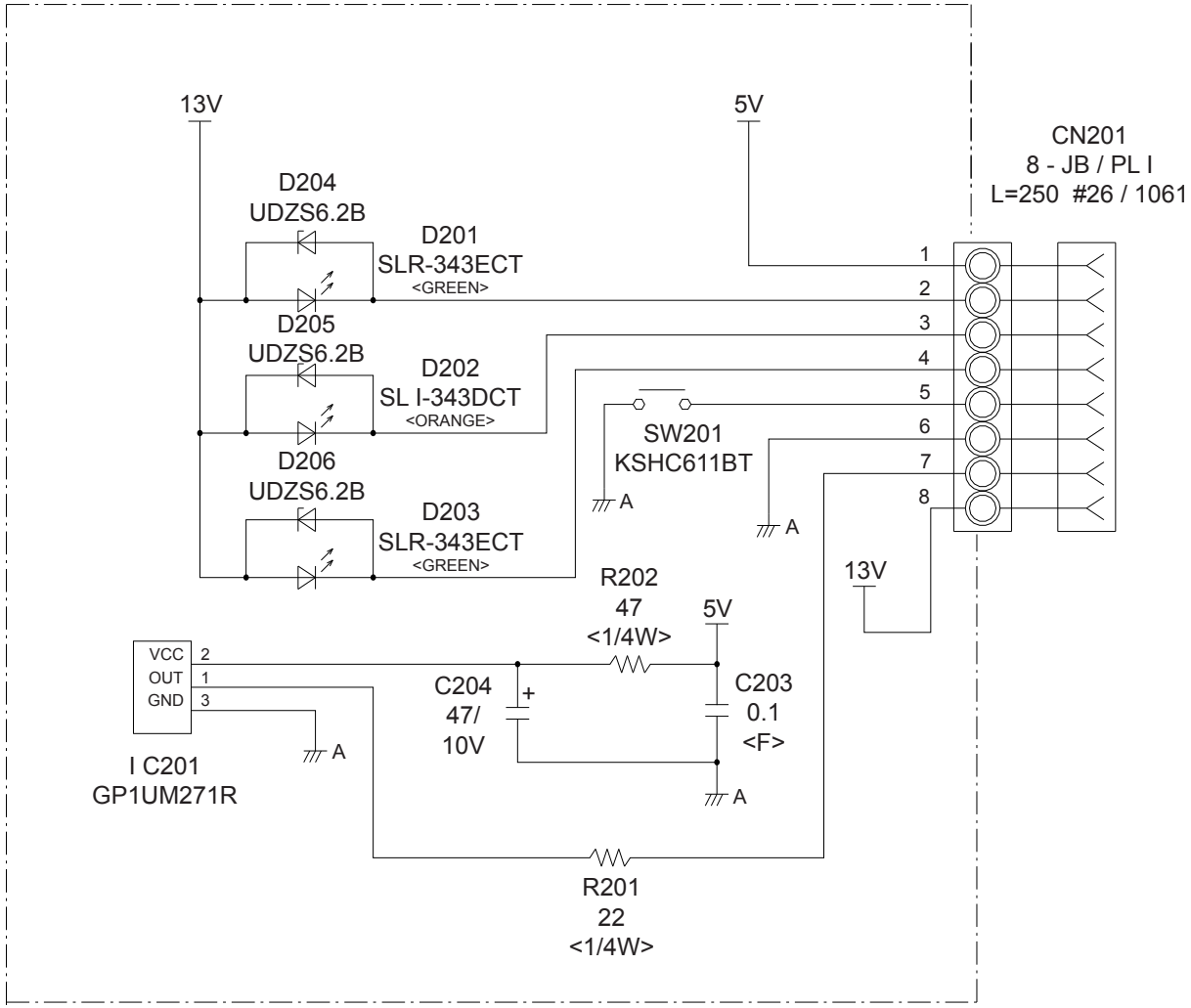

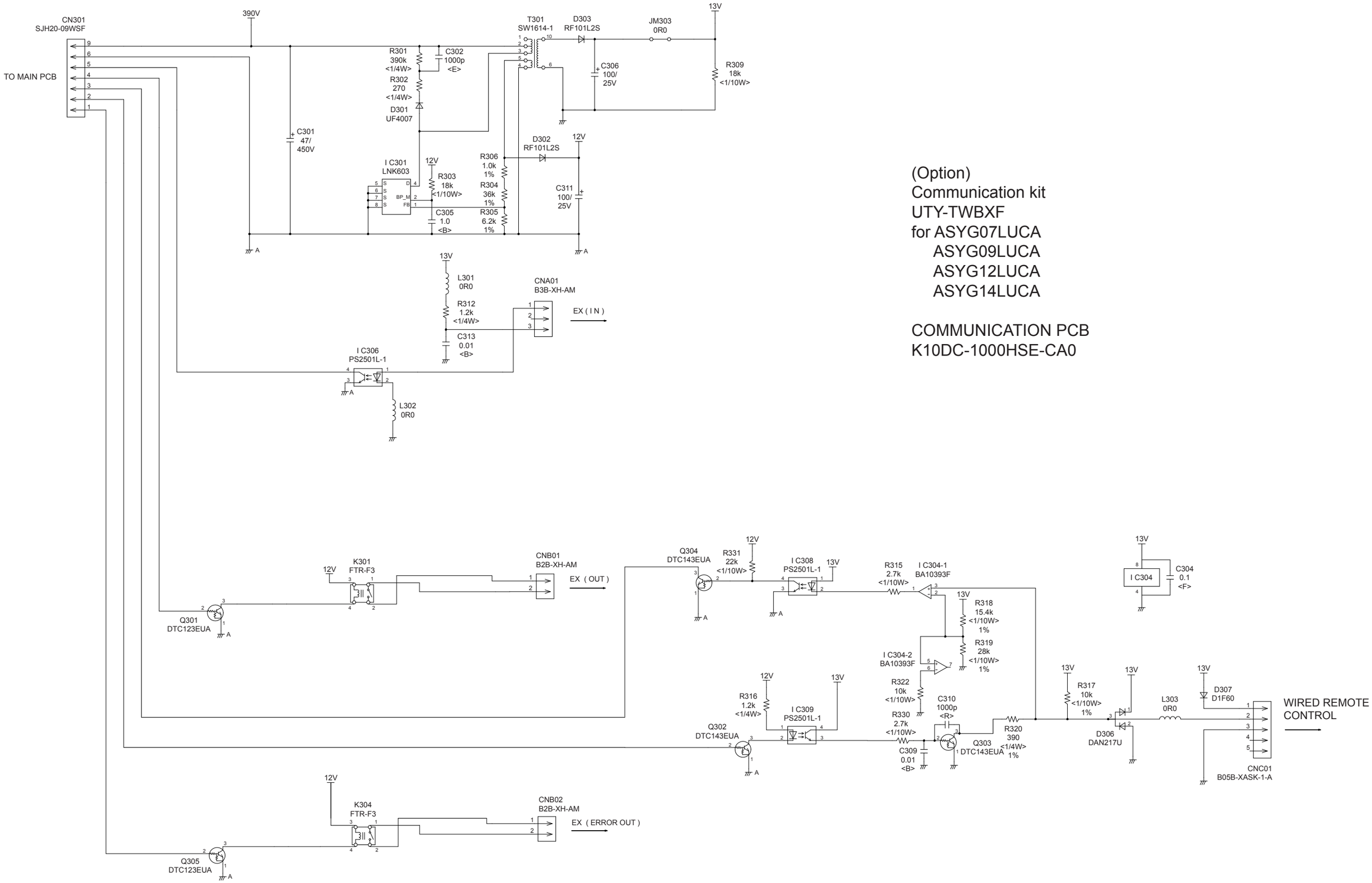

(Option)
Communication kit
UTY-TWBXF
for ASYG07LUCA
ASYG09LUCA
ASYG12LUCA
ASYG14LUCA

COMMUNICATION PCB
K10DC-1000HSE-CA0

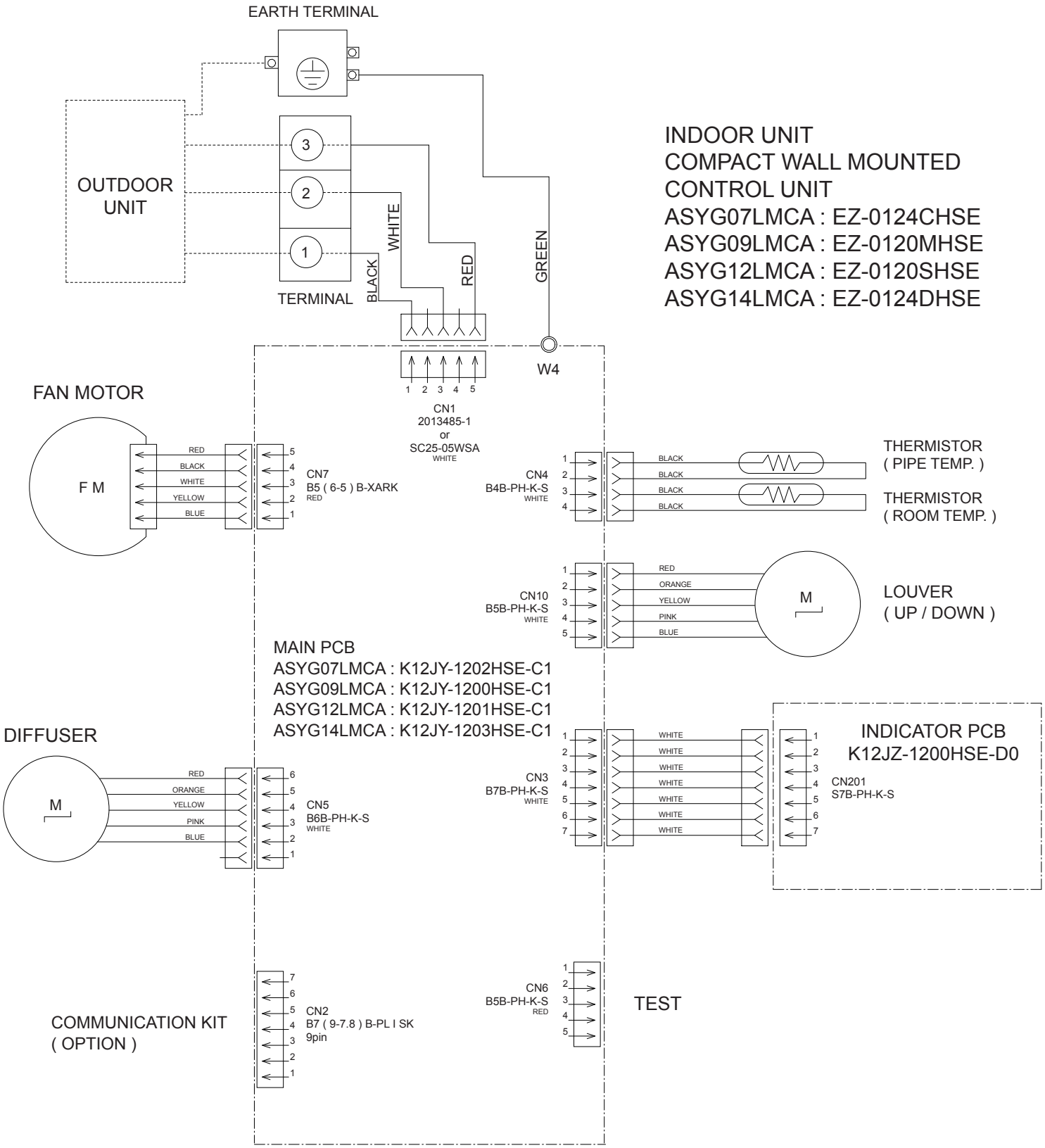
EARTH TERMINAL
OUTDOOR UNIT
3
2
1
TERMINAL
BLACK
WHITE
RED
GREEN
W4
1 2 3 4 5
CN1
2013485-1
or
SC25-05WSA
WHITE
INDOOR UNIT
COMPACT WALL MOUNTED
CONTROL UNIT
ASYG07LMCA : EZ-0124CHSE
ASYG09LMCA : EZ-0120MHSE
ASYG12LMCA : EZ-0120SHSE
ASYG14LMCA : EZ-0124DHSE
FAN MOTOR
F M
RED
BLACK
WHITE
YELLOW
BLUE
CN7
B5 (6-5) B-XARK
RED
CN4
B4B-PH-K-S
WHITE
BLACK
BLACK
BLACK
BLACK
THERMISTOR
(PIPE TEMP.)
THERMISTOR
(ROOM TEMP.)
CN10
B5B-PH-K-S
WHITE
RED
ORANGE
YELLOW
PINK
BLUE
M
LOUVER
(UP / DOWN)
MAIN PCB
ASYG07LMCA : K12JY-1202HSE-C1
ASYG09LMCA : K12JY-1200HSE-C1
ASYG12LMCA : K12JY-1201HSE-C1
ASYG14LMCA : K12JY-1203HSE-C1
DIFFUSER
M
RED
ORANGE
YELLOW
PINK
BLUE
CN5
B6B-PH-K-S
WHITE
CN3
B7B-PH-K-S
WHITE
WHITE
INDICATOR PCB
K12JZ-1200HSE-D0
CN201
S7B-PH-K-S
CN6
B5B-PH-K-S
RED
TEST
COMMUNICATION KIT
(OPTION)
CN2
B7 (9-7.8) B-PL I SK
9pin

INDOOR UNIT
COMPACT WALL MOUNTED
MAIN PCB
ASYG07LMCA : K12JY-1202HSE-C2
ASYG09LMCA : K12JY-1200HSE-C1
ASYG12LMCA : K12JY-1201HSE-C1
ASYG14LMCA : K12JY-1203HSE-C1

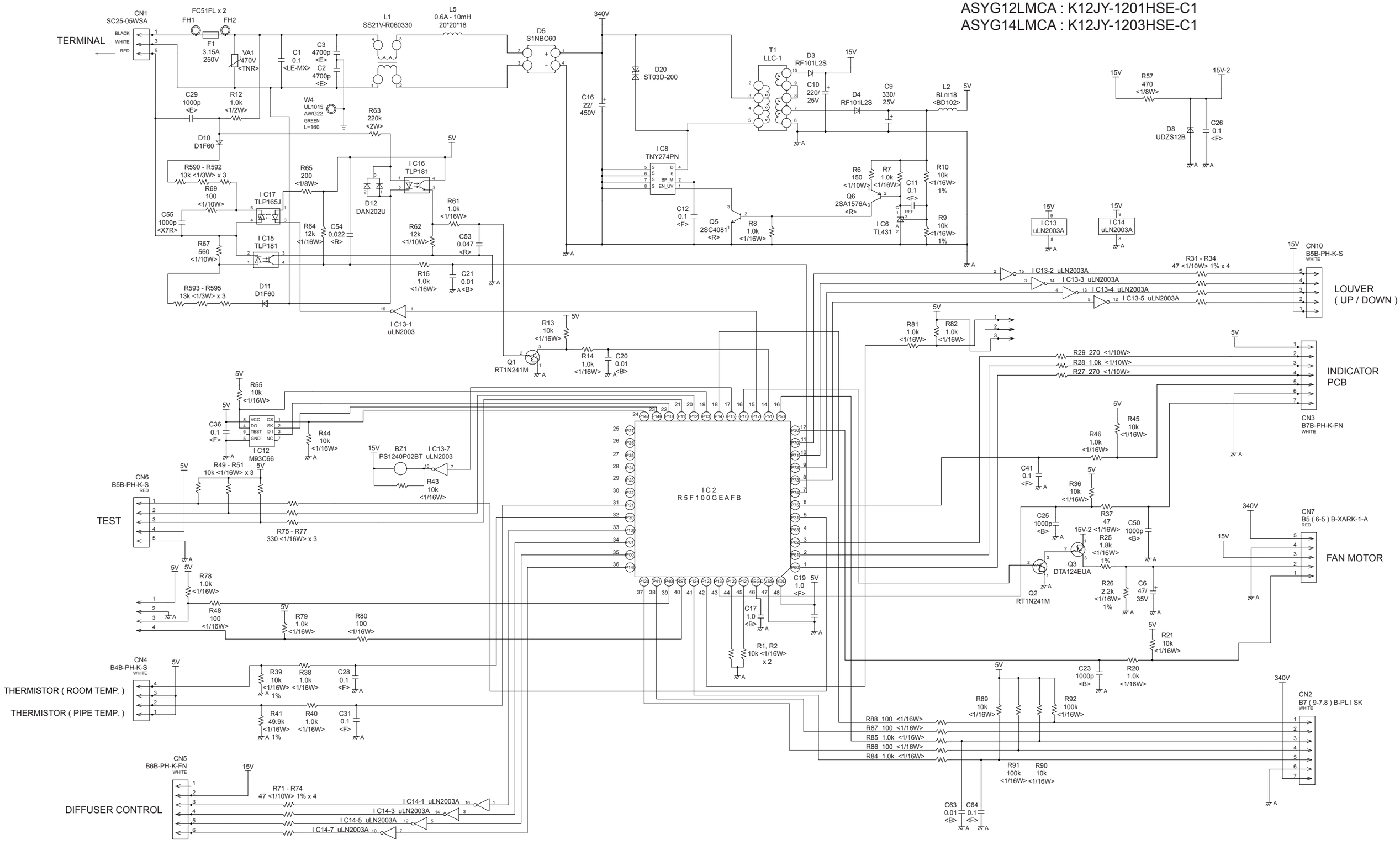

INDOOR UNIT
COMPACT WALL MOUNTED
ASYG07LMCA
ASYG09LMCA
ASYG12LMCA
ASYG14LMCA
INDICATOR PCB
K12JZ-1200HSE-D0

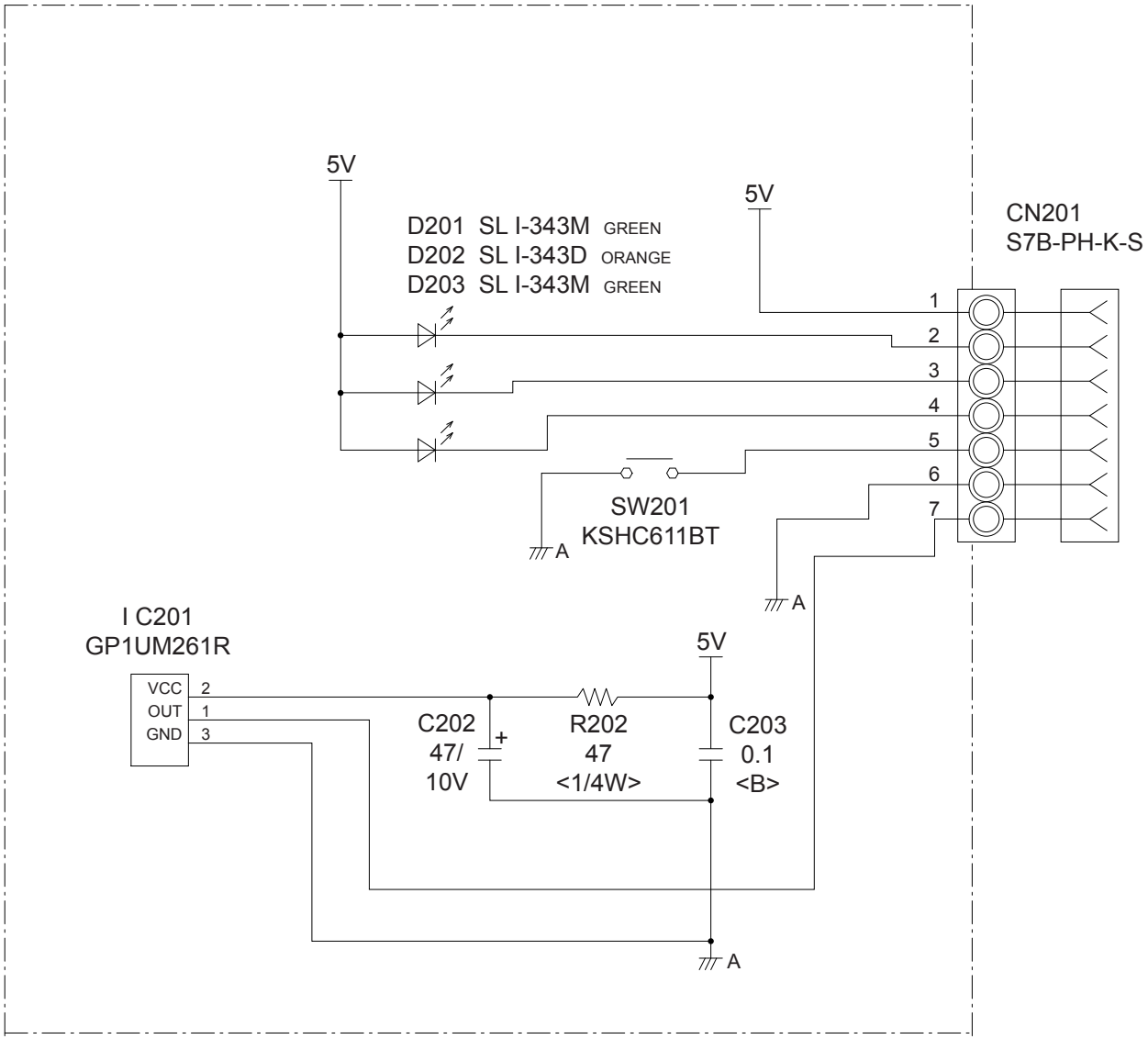

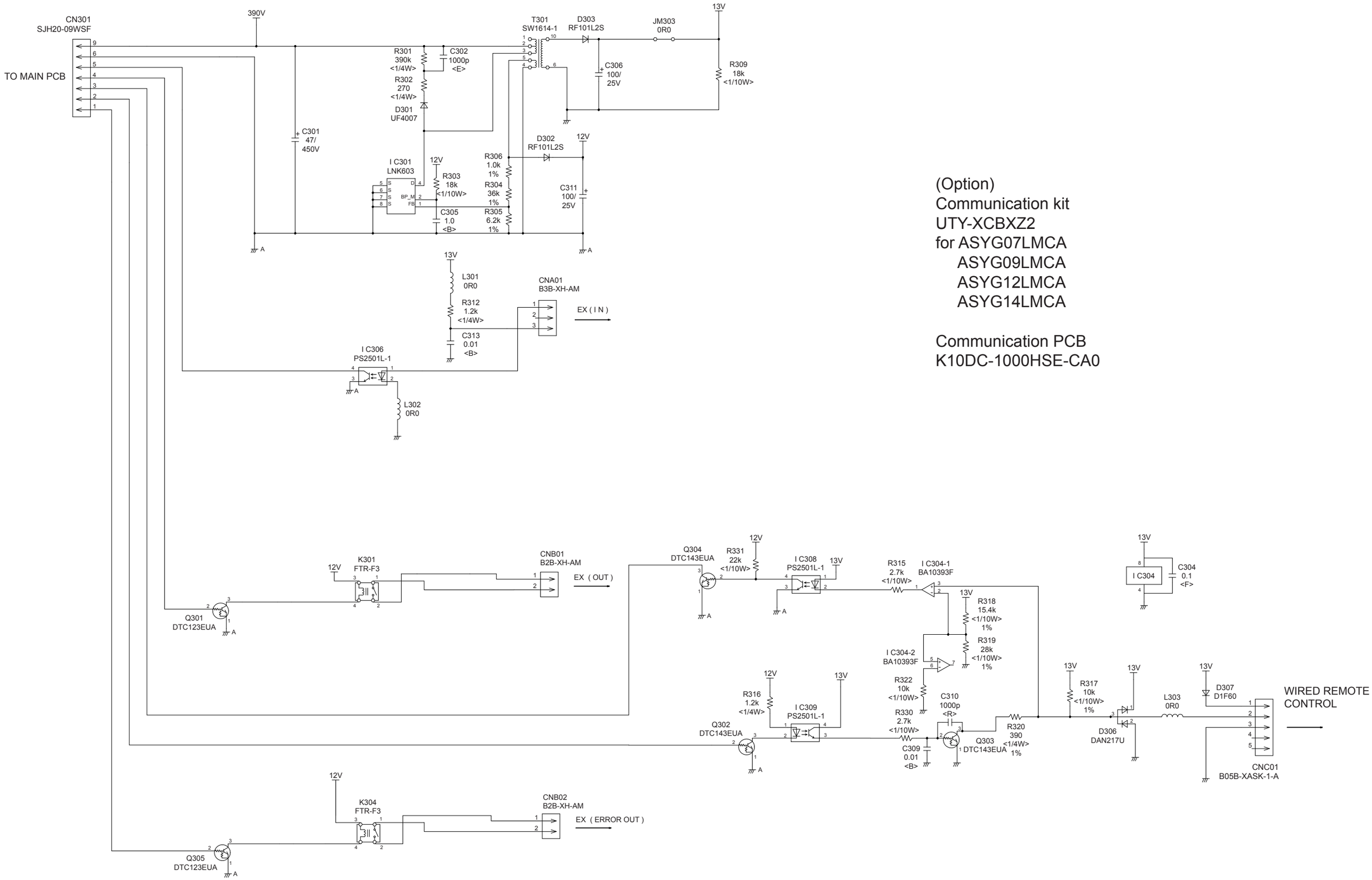

(Option)
Communication kit
UTY-XCBXZ2
for ASYG07LMCA
ASYG09LMCA
ASYG12LMCA
ASYG14LMCA

Communication PCB
K10DC-1000HSE-CA0

INDOOR UNIT
COMPACT CASSETTE
CONTROL UNIT
AUYG07LVLA : EZ-01004HSE
AUYG09LVLA : EZ-01005HSE
AUYG12LVLA : EZ-01006HSE
AUYG12LVLB : EZ-0122HHSE

MAIN PCB
AUYG07LVLA : K06AK-1007HSE-C1
AUYG09LVLA : K06AK-1008HSE-C1
AUYG12LVLA : K06AK-1009HSE-C1
AUYG12LVLB : K06AK-1216HSE-C1

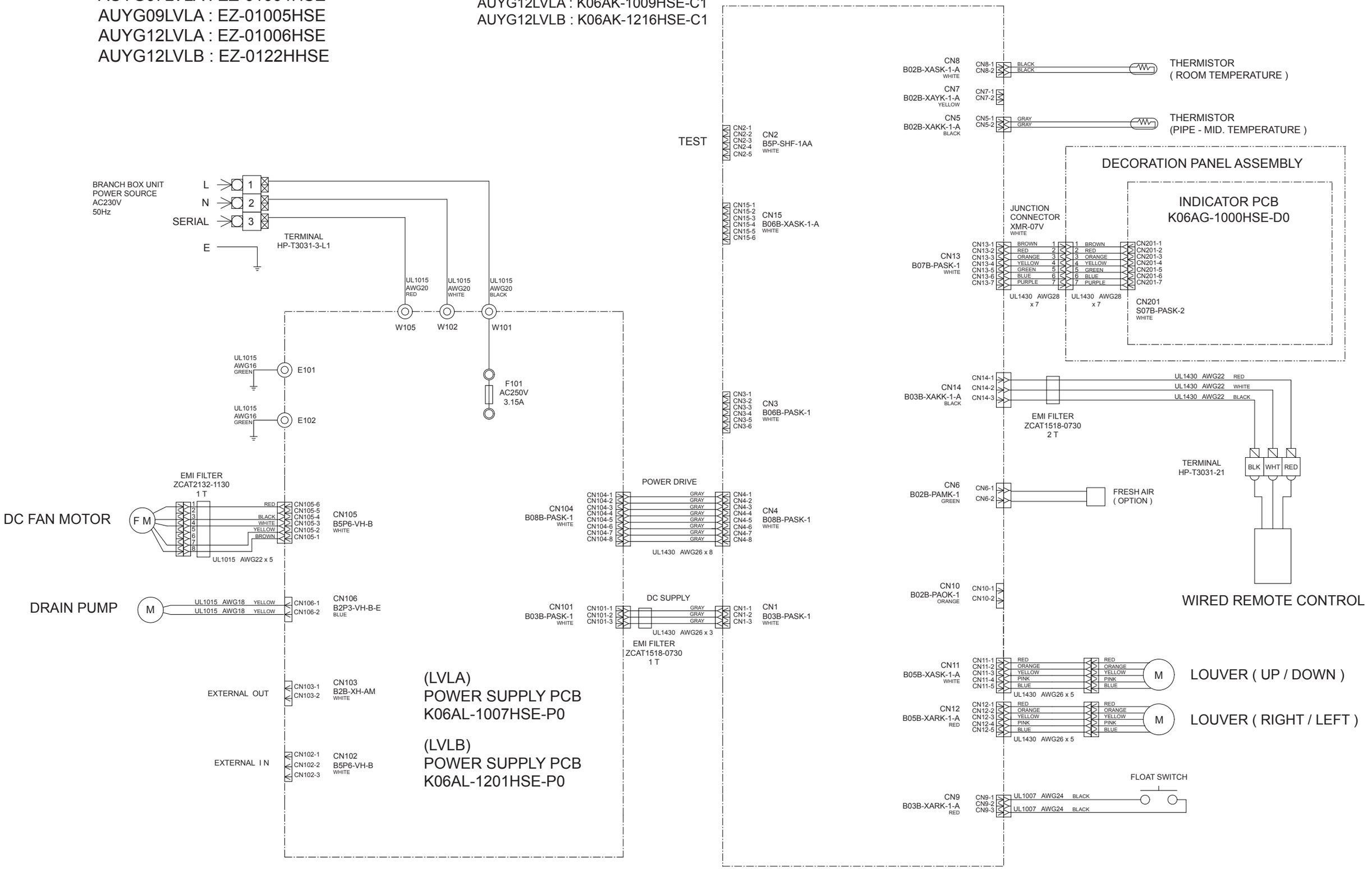

INDOOR UNIT
MAIN PCB

AUYG07LVLA : K06AK-1007HSE-C1
AUYG09LVLA : K06AK-1008HSE-C1
AUYG12LVLA : K06AK-1009HSE-C1
AUYG12LVLB : K06AK-1216HSE-C1

ARYG07LLTA : K06AK-100CHSE-C1
ARYG09LLTA : K06AK-100DHSE-C1
ARYG12LLTA : K06AK-100EHSE-C1
ARYG12LLTB : K06AK-1101HSE-C1
(Serial number : T)

ARYG07LLTA : K06AK-120KHSE-C1
ARYG09LLTA : K06AK-120LHSE-C1
ARYG12LLTB : K06AK-120MHSE-C1
(Serial number : R)

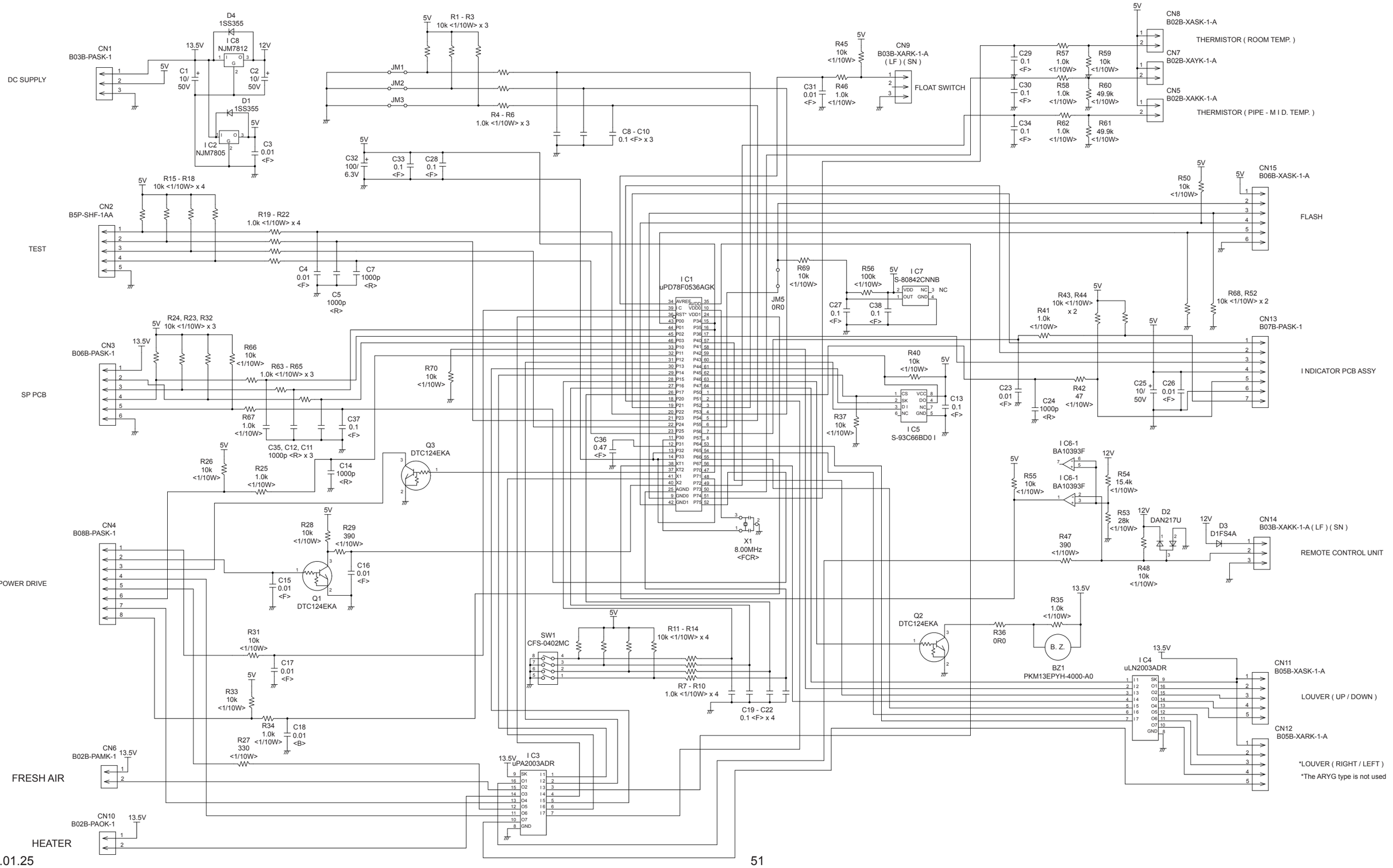

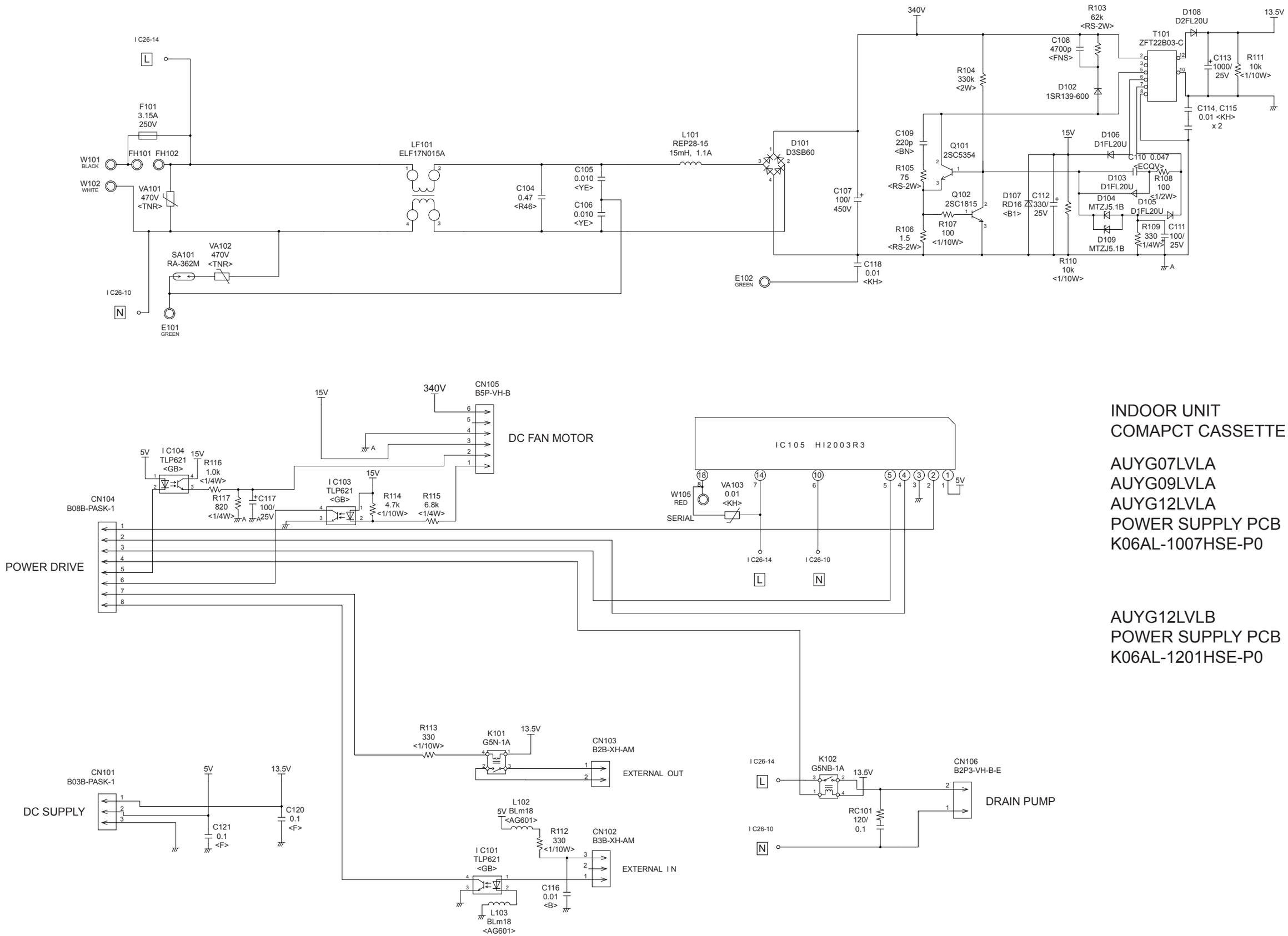

INDOOR UNIT
COMAPCT CASSETTE

AUYG07LVLA
AUYG09LVLA
AUYG12LVLA
POWER SUPPLY PCB
K06AL-1007HSE-P0

AUYG12LVLB
POWER SUPPLY PCB
K06AL-1201HSE-P0

INDOOR UNIT
COMPACT CASSETTE
AUYG07LVLA
AUYG09LVLA
AUYG12LVLA
AUYG12LVLB

INDICATOR PCB (OPTION)
K06AG-1000HSE-D0

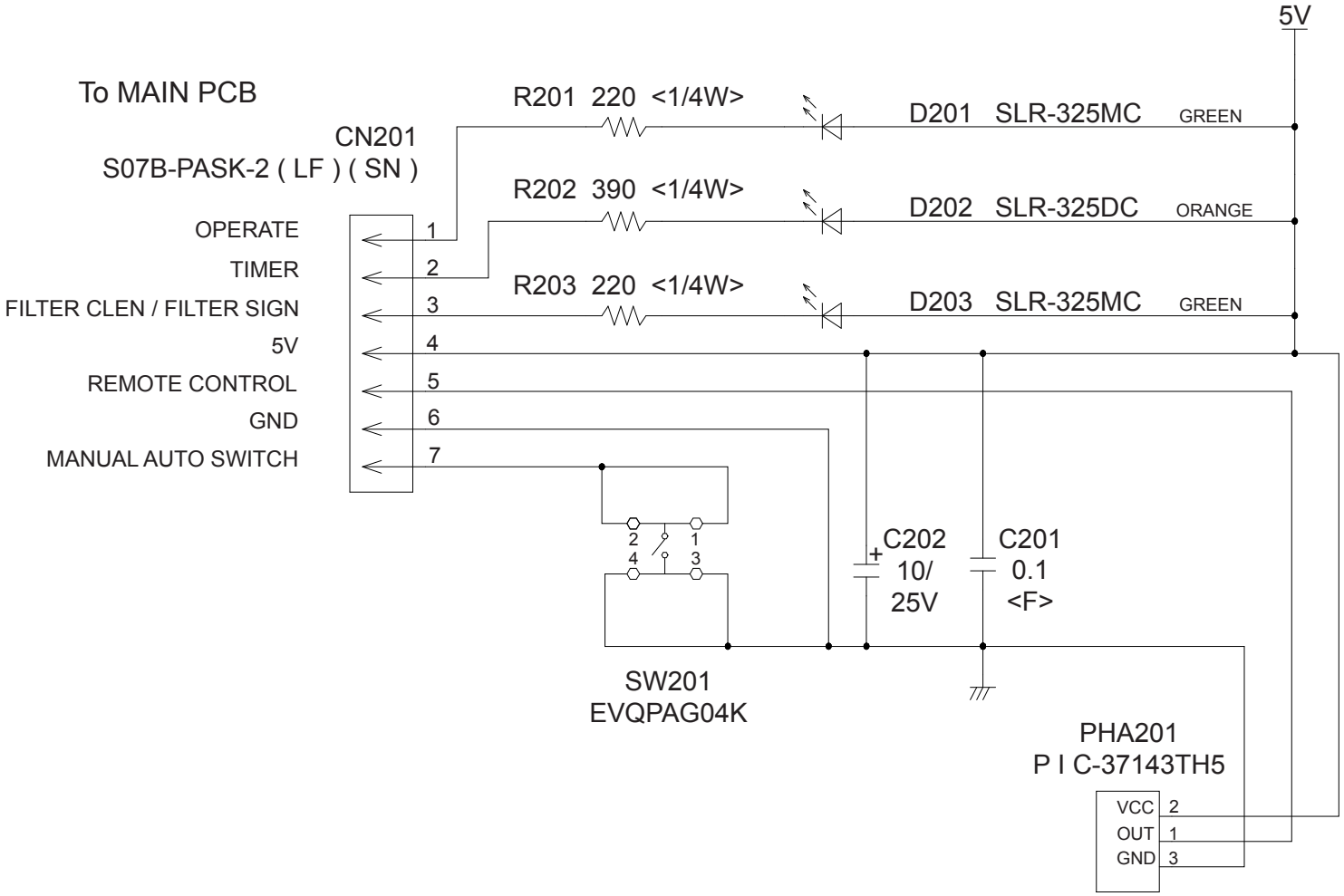

INDICATOR PCB ASSEMBLY (SWITCH + DISPLAY)
K06DD-0801HSE-F0

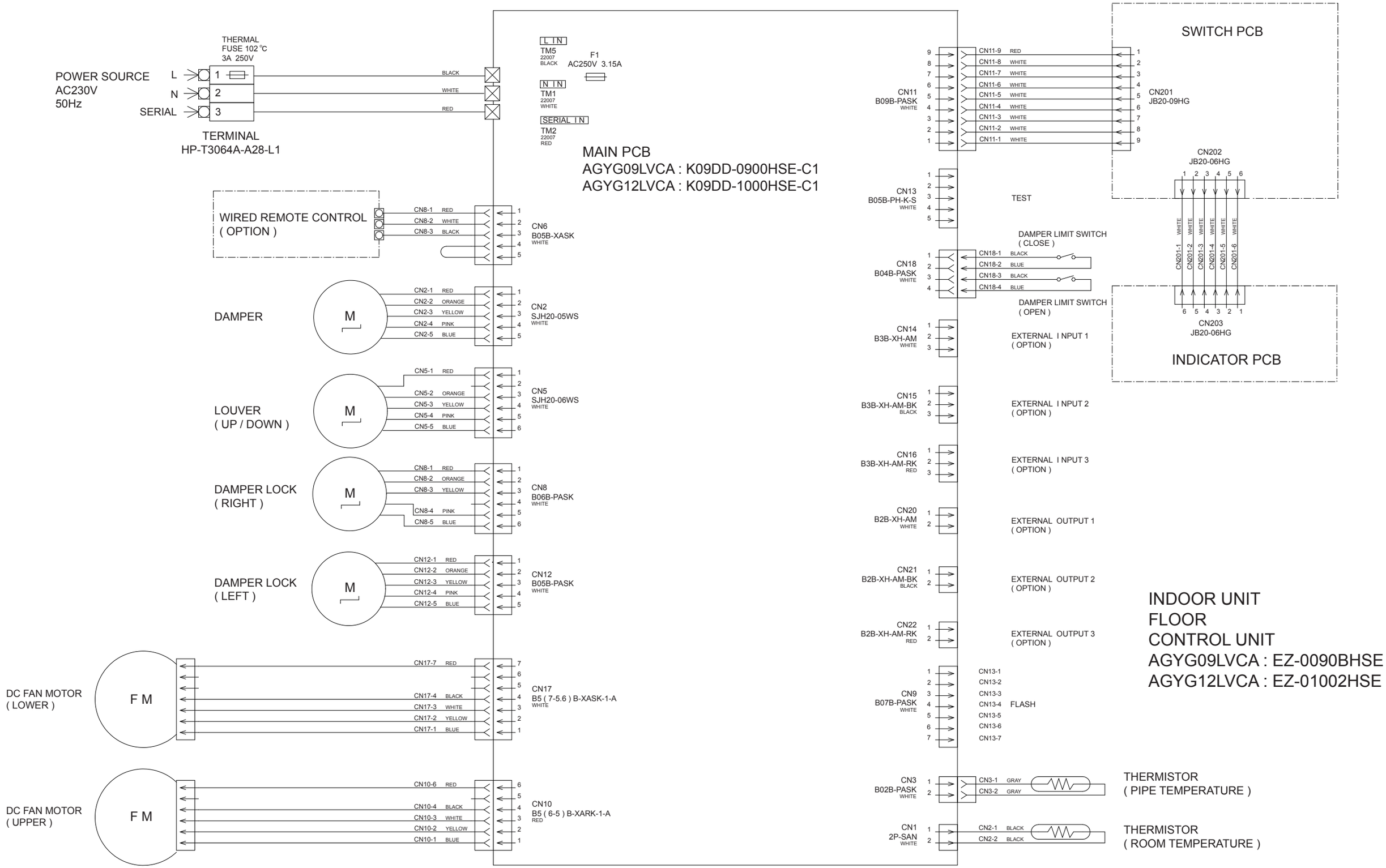

INDOOR UNIT
FLOOR
MAIN PCB
AGYG09LVCA : K09DD-0900HSE-C1
AGYG12LVCA : K09DD-1000HSE-C1

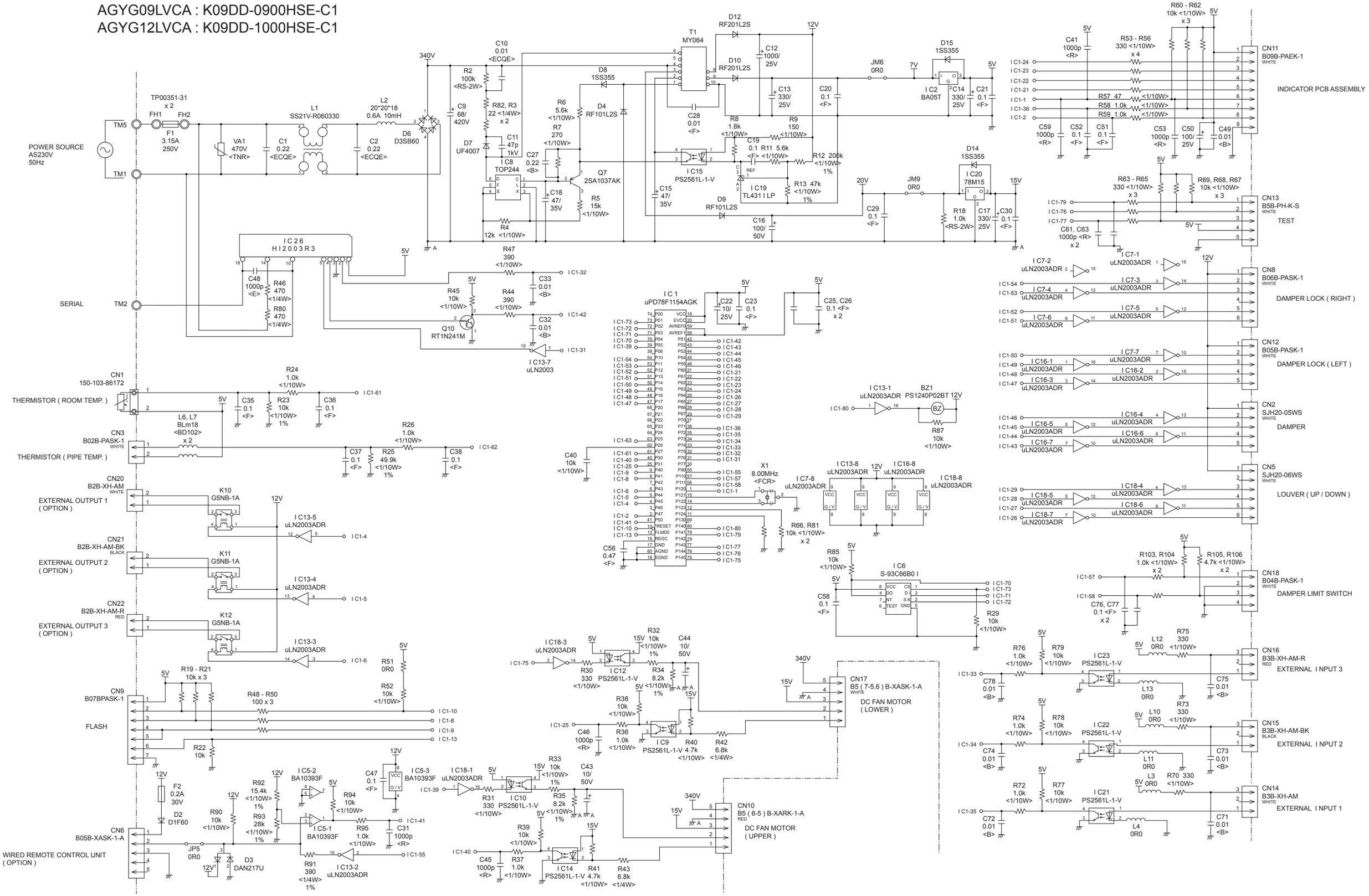

INDOOR UNIT
FLOOR
AGYG09LVCA
AGYG12LVCA

INDICATOR PCB
K06DD-0801HSE-F0

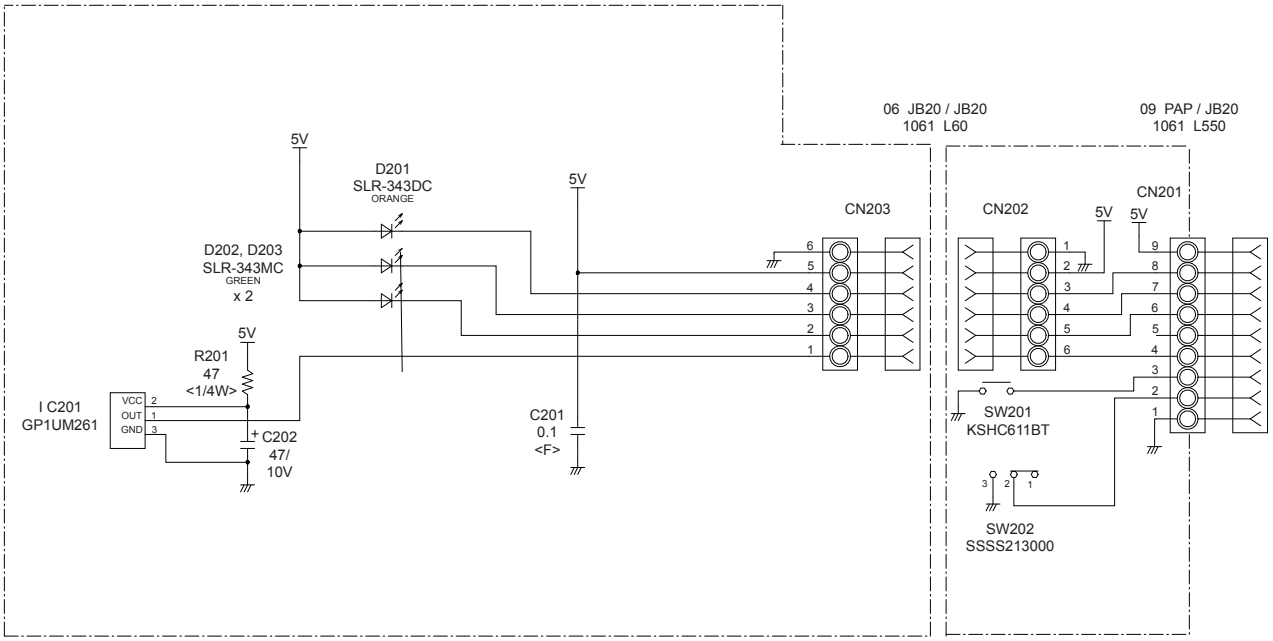

INDOOR UNIT
SLIM DUCT
CONTROL UNIT

ARYG07LLTA : EZ-01009HSE
ARYG09LLTA : EZ-0100AHSE
ARYG12LLTA : EZ-0100BHSE
ARYG12LLTB : EZ-01110HSE
(Serial number : T)

ARYG07LLTA : EZ-01222HSE
ARYG09LLTA : EZ-01223HSE
ARYG12LLTB : EZ-01224HSE
(Serial number : R)

MAIN PCB

ARYG07LLTA : K06AK-100CHSE-C1
ARYG09LLTA : K06AK-100DHSE-C1
ARYG12LLTA : K06AK-100EHSE-C1
ARYG12LLTB : K06AK-1101HSE-C1
(Serial number : T)

ARYG07LLTA : K06AK-120KHSE-C1
ARYG09LLTA : K06AK-120LHSE-C1
ARYG12LLTB : K06AK-120MHSE-C1
(Serial number : R)

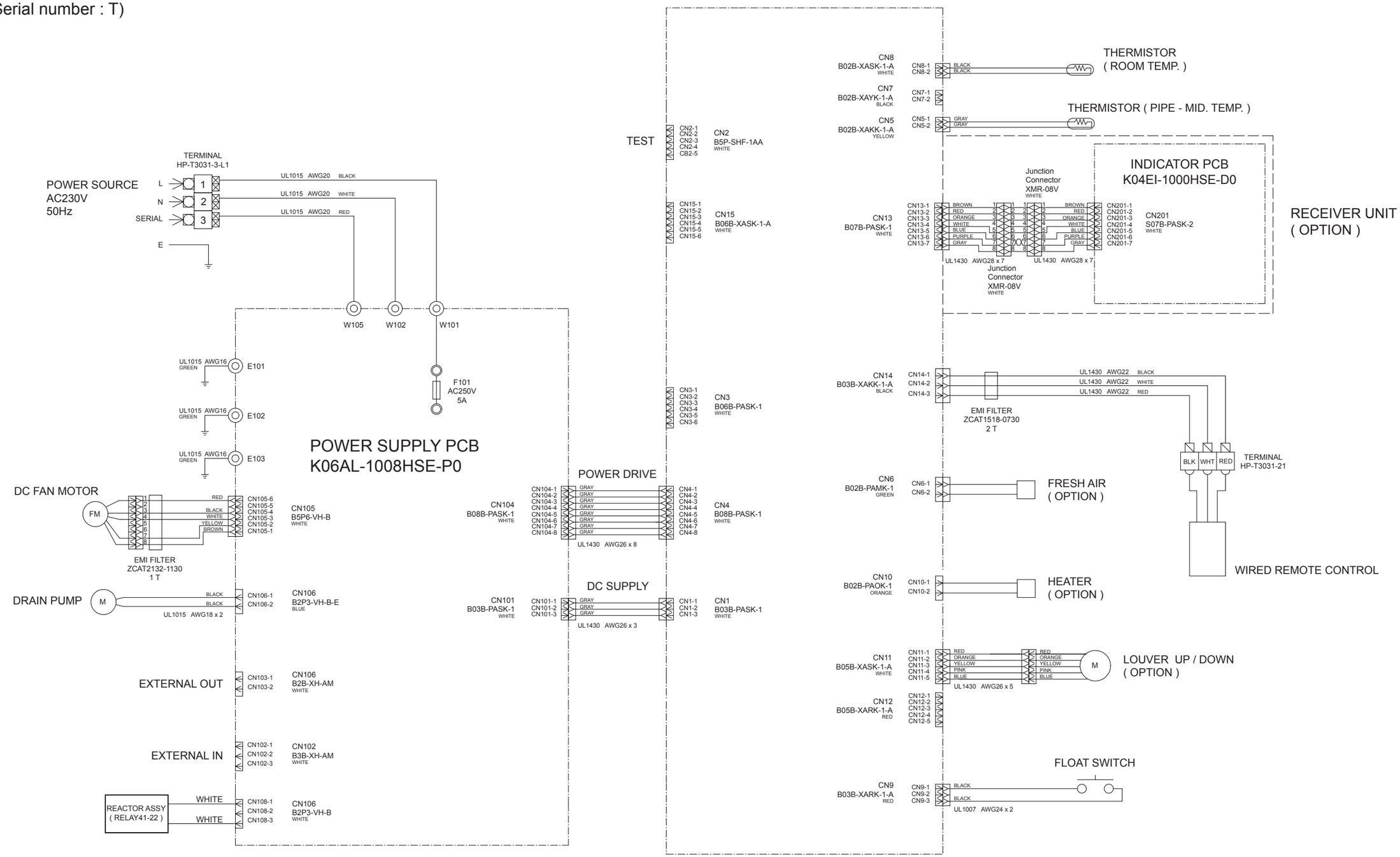

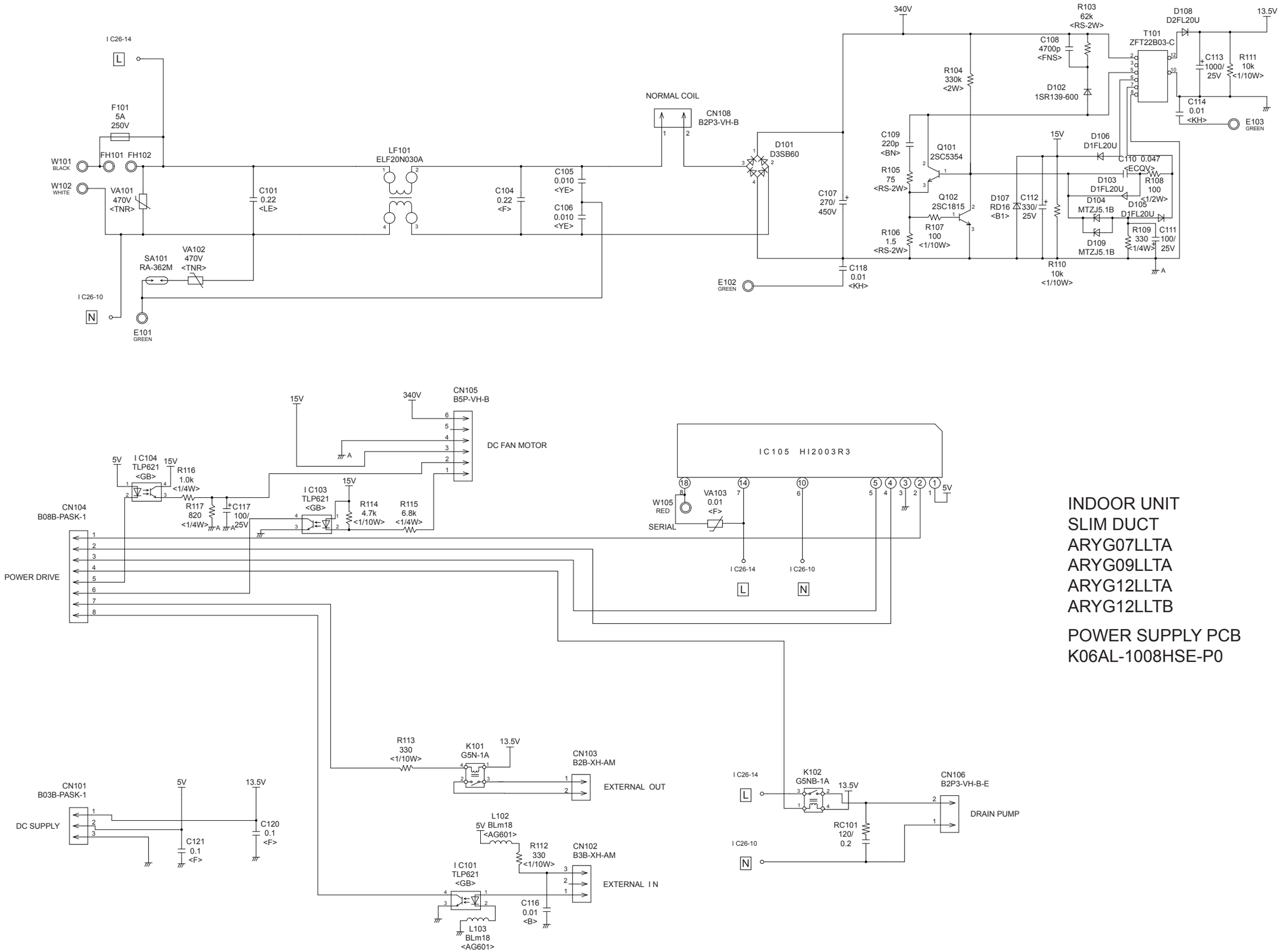

INDOOR UNIT
SLIM DUCT
ARYG07LLTA
ARYG09LLTA
ARYG12LLTA
ARYG12LLTB

POWER SUPPLY PCB
K06AL-1008HSE-P0

INDOOR UNIT
SLIM DUCT
ARYG07LLTA
ARYG09LLTA
ARYG12LLTA
ARYG12LLTB

INDICATOR PCB (OPTION)
K04EI-1000HSE-D0

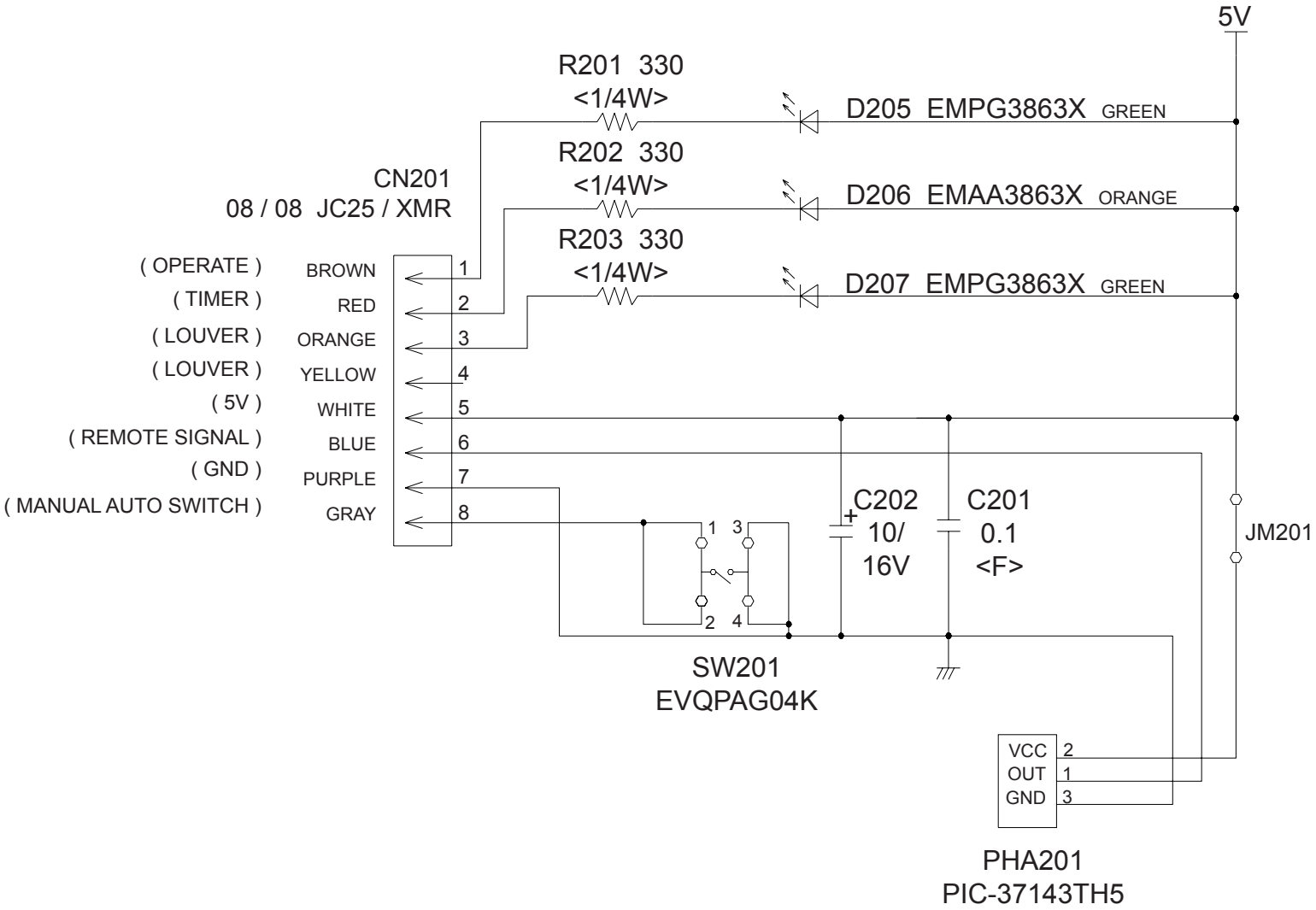

● : 0.5s on / 0.5s off

◇ : 0.1s on / 0.1s off

( ) : Number of flashing

ERROR DETECTION

INDOOR UNIT and WIRED REMOTE CONTROL

If you use a wireless remote control, the lamp on the photo detector unit will output error codes by way of blinking patterns.
If you use a wired type remote control, error codes will appear on the remote control display. See the lamp blinking patterns and error codes in the table. An error display is displayed only during running.

Indoor unit			Wired remote control	Description
OPERATION lamp (green)	TIMER lamp (orange)	ECONOMY lamp (green)		
●(1)	●(1)	◇	11	Serial communication error
●(1)	●(2)	◇	12	Wired remote control communication error
●(1)	●(5)	◇	15	Check run unfinished
●(2)	●(1)	◇	21	Unit number or Refrigerant circuit address setting error [Simultaneous Multi]
●(2)	●(2)	◇	22	Indoor unit capacity error
●(2)	●(3)	◇	23	Combination error
●(2)	●(4)	◇	24	• Connection unit number error (indoor slave unit) [Simultaneous Multi] • Connection unit number error (indoor unit or branch unit) [Flexible Multi]
●(2)	●(7)	◇	27	Master unit, slave unit set-up error [Simultaneous Multi]
●(3)	●(2)	◇	32	Indoor unit PCB model information error
●(3)	●(5)	◇	35	Manual auto switch error
●(4)	●(1)	◇	41	Inlet air temp. sensor error
●(4)	●(2)	◇	42	Indoor unit Heat Ex. Middle temp. sensor error
●(5)	●(1)	◇	51	Indoor unit fan motor error
●(5)	●(3)	◇	53	Drain pump error
●(5)	●(7)	◇	57	Damper error
●(5)	●(15)	◇	5U	Indoor unit error
●(6)	●(2)	◇	62	Outdoor unit main PCB model information error or communication error
●(6)	●(3)	◇	63	Inverter error
●(6)	●(4)	◇	64	Active filter error, PFC circuit error
●(6)	●(5)	◇	65	Trip terminal L error
●(6)	●(10)	◇	6A	Display PCB microcomputers communication error
●(7)	●(1)	◇	71	Discharge temp. sensor error
●(7)	●(2)	◇	72	Compressor temp. sensor error
●(7)	●(3)	◇	73	Outdoor unit Heat Ex. liquid temp. sensor error
●(7)	●(4)	◇	74	Outdoor temp. sensor error
●(7)	●(5)	◇	75	Suction Gas temp. sensor error
●(7)	●(6)	◇	76	• 2-way valve temp. sensor error • 3-way valve temp. sensor error
●(7)	●(7)	◇	77	Heat sink temp. sensor error
●(8)	●(2)	◇	82	• Sub-cool Heat Ex. gas inlet temp. sensor error • Sub-cool Heat Ex. gas outlet temp. sensor error
●(8)	●(3)	◇	83	Liquid pipe temp. sensor error
●(8)	●(4)	◇	84	Current sensor error
●(8)	●(6)	◇	86	• Discharge pressure sensor error • Suction pressure sensor error • High pressure switch error
●(9)	●(4)	◇	94	Trip detection
●(9)	●(5)	◇	95	Compressor rotor position detection error (permanent stop)
●(9)	●(7)	◇	97	Outdoor unit fan motor error
●(9)	●(9)	◇	99	4-way valve error
●(10)	●(1)	◇	A1	Discharge temp. error
●(10)	●(3)	◇	A3	Compressor temp. error
●(10)	●(4)	◇	A4	High pressure error
●(10)	●(5)	◇	A5	Low pressure error
●(13)	●(2)	◇	J2	Branch boxes error [Flexible Multi]

This is possible only on a wired remote control.

If an error occurs, the following display will be shown. (“Er” will appear in the set room temperature display.)

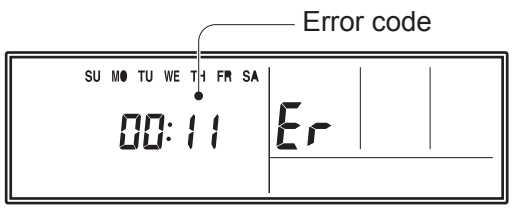

EX. Self-diagnosis

PARTS

OUTDOOR UNIT

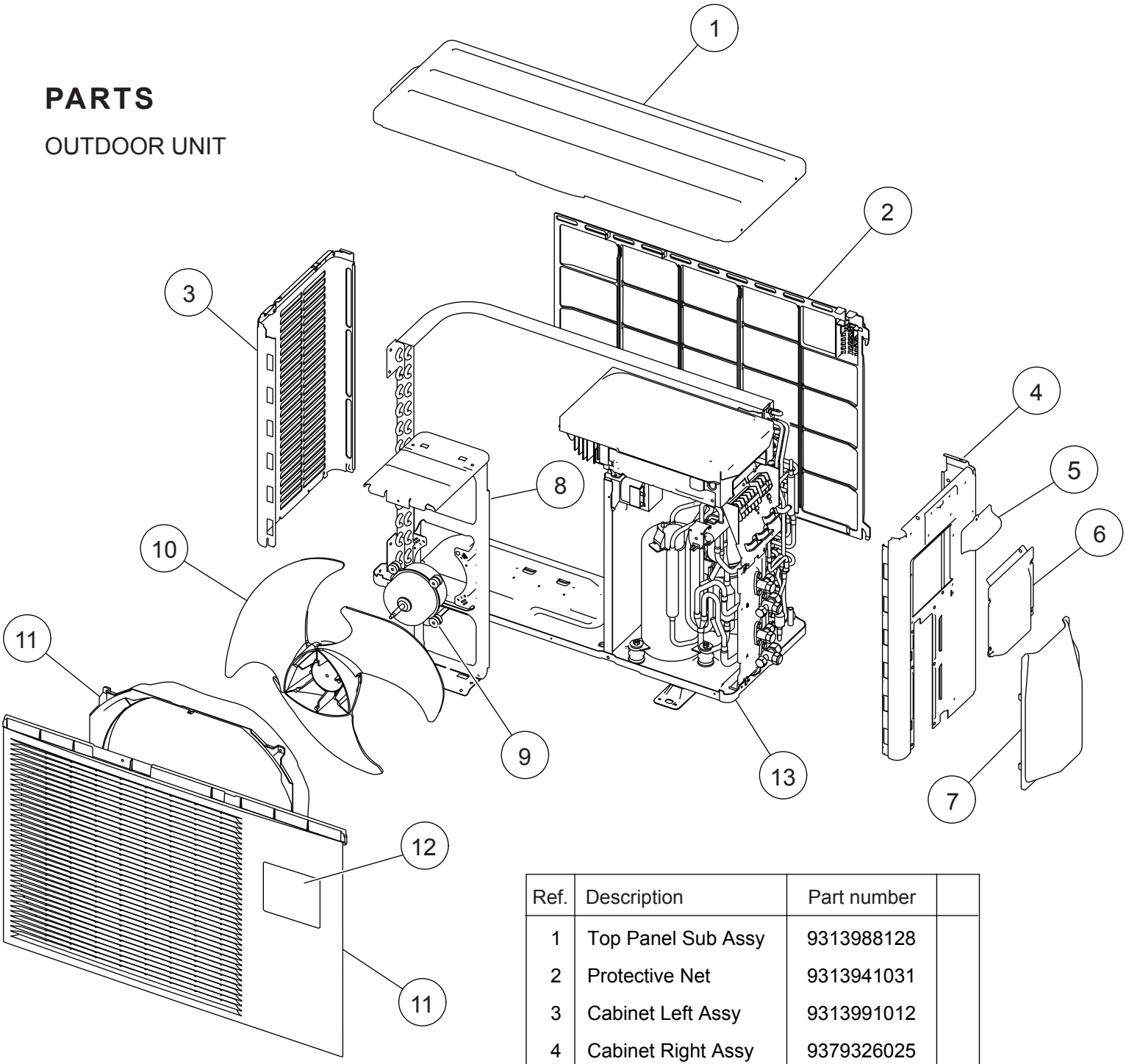

Ref.	Description	Part number	
1	Top Panel Sub Assy	9313988128	
2	Protective Net	9313941031	
3	Cabinet Left Assy	9313991012	
4	Cabinet Right Assy	9379326025	
5	Grip	9317588003	
6	Switch Cover A Assy	9379320016	
7	Switch Cover B	9379206013	
8	Motor Bracket Assy	9313990053	
9	Fan Motor	9602864003	
10	Propeller Fan	9313808013	
11	Front Panel Assy	9313972028	
12	Emblem Rear	9319151007	
13	Base Assy	9316885004	
--	Drain Assy	9303029022	

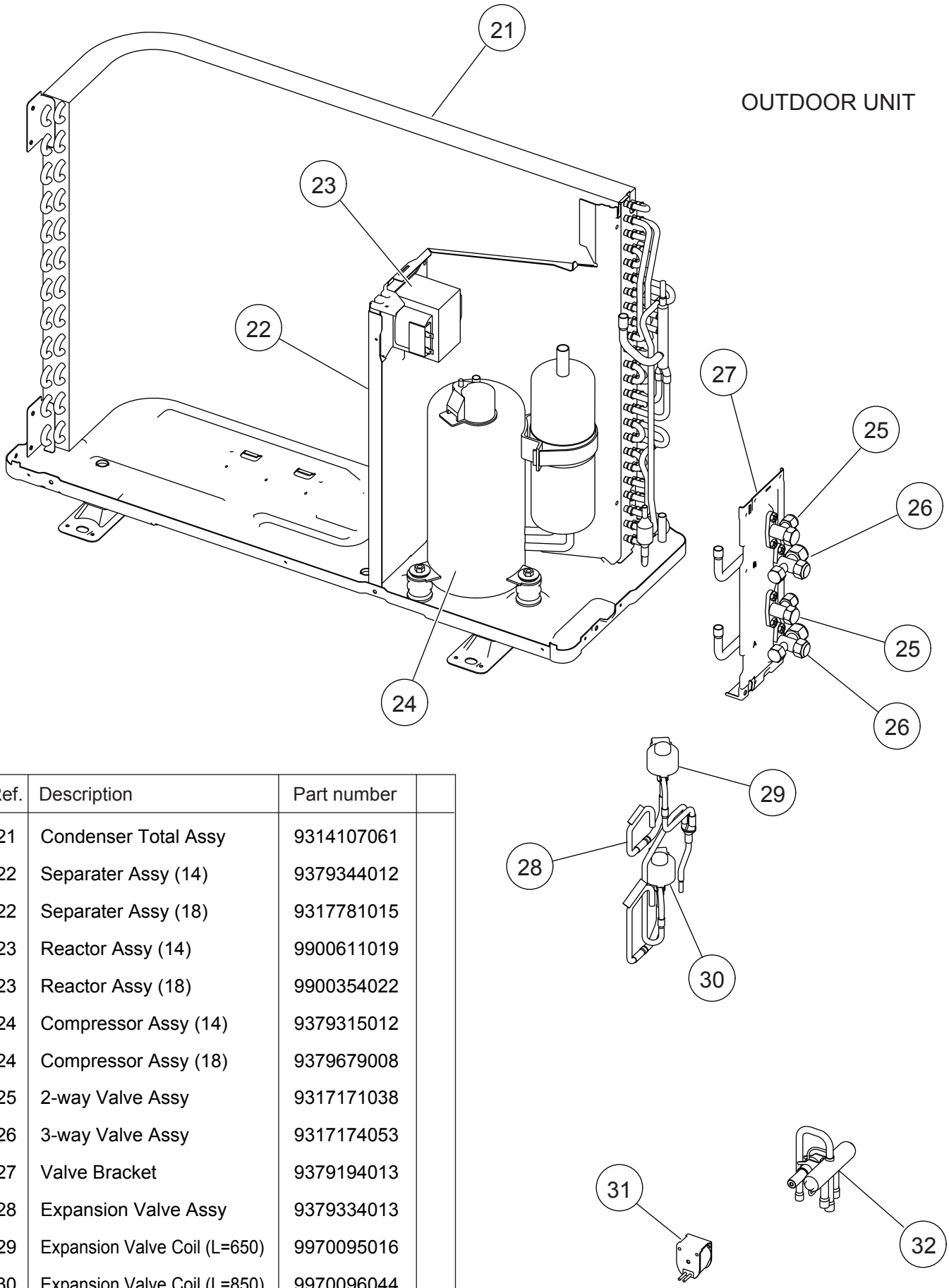

Ref.	Description	Part number	
21	Condenser Total Assy	9314107061	
22	Separater Assy (14)	9379344012	
22	Separater Assy (18)	9317781015	
23	Reactor Assy (14)	9900611019	
23	Reactor Assy (18)	9900354022	
24	Compressor Assy (14)	9379315012	
24	Compressor Assy (18)	9379679008	
25	2-way Valve Assy	9317171038	
26	3-way Valve Assy	9317174053	
27	Valve Bracket	9379194013	
28	Expansion Valve Assy	9379334013	
29	Expansion Valve Coil (L=650)	9970095016	
30	Expansion Valve Coil (L=850)	9970096044	
31	Solenoid	9970033032	
32	4-way Valve	9970065019	

OUTDOOR UNIT

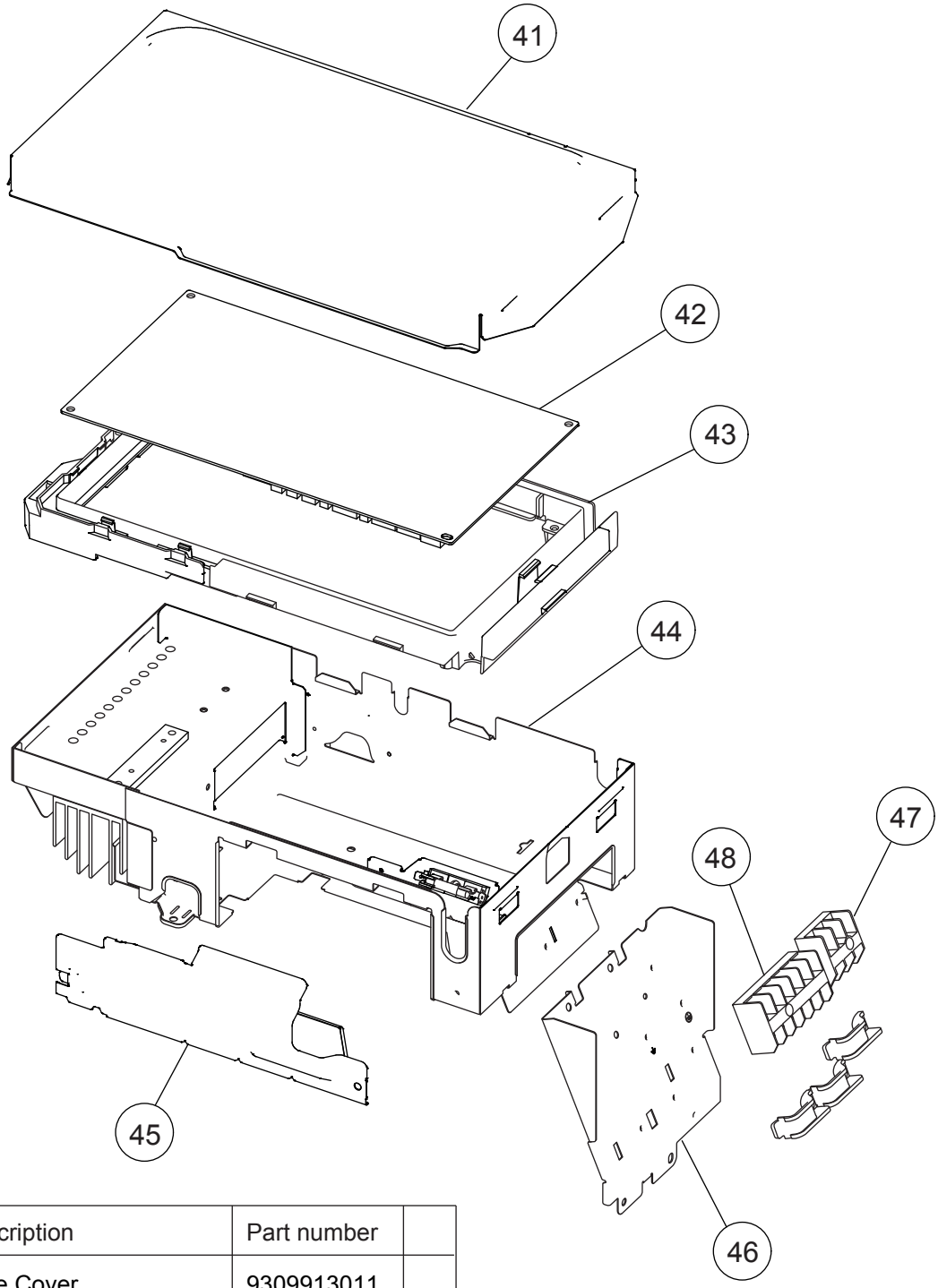

Ref.	Description	Part number	
41	Case Cover	9309913011	
42	Inverter PCB Assy (14)	9708080093	
42	Inverter PCB Assy (18)	9708080109	
43	PCB Holder	9313074029	
44	Inverter Case Assy	9379673013	
45	Inverter Case Cover	9379252010	
46	Terminal Bracket Assy	9379324021	
47	Terminal 3P	9306489175	
48	Terminal 6P	9900016050	
--	Valve Thermistor Assy	9900535001	
--	Pipe Thermistor Assy	9900536008	
--	Outdoor Thermistor	9900544003	
--	Heatsink Thermistor	9900518035	
--	Compressor Thermistor (18)	9900516017	

PARTS

INDOOR UNIT
COMPACT WALL MOUNTED
ASYG07LJCA
ASYG09LJCA
ASYG12LJCA

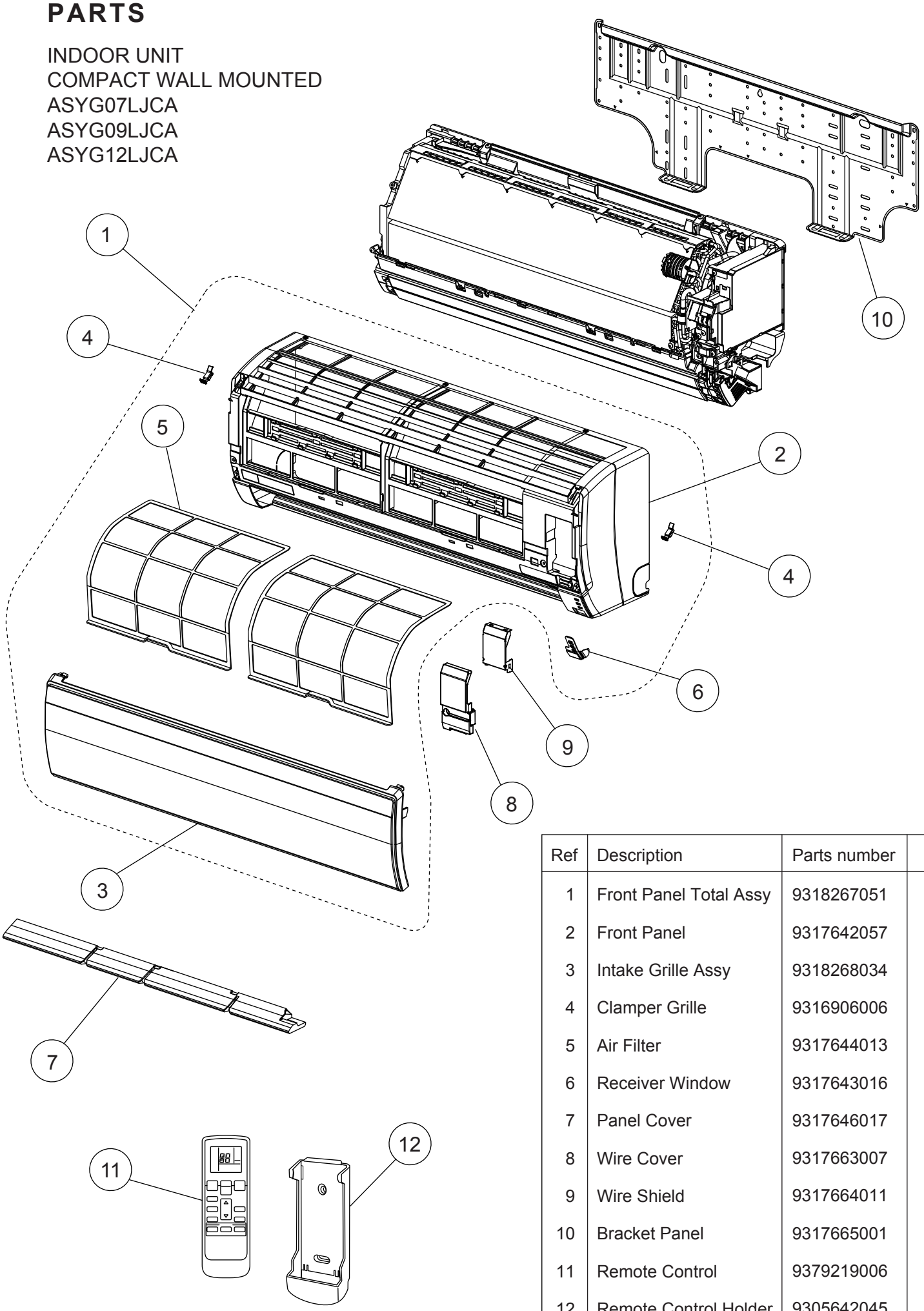

Ref	Description	Parts number	
1	Front Panel Total Assy	9318267051	
2	Front Panel	9317642057	
3	Intake Grille Assy	9318268034	
4	Clamper Grille	9316906006	
5	Air Filter	9317644013	
6	Receiver Window	9317643016	
7	Panel Cover	9317646017	
8	Wire Cover	9317663007	
9	Wire Shield	9317664011	
10	Bracket Panel	9317665001	
11	Remote Control	9379219006	
12	Remote Control Holder	9305642045	
--	Air Clean Filter Assy	9317250009	

INDOOR UNIT
COMPACT WALL MOUNTED
ASYG07LJCA
ASYG09LJCA
ASYG12LJCA

Ref	Description	Parts number	
21	Evaporator Total Assy	9317820011	
22	Joint Pipe Assy	9317838009	
23	Filter Guide	9317652001	
24	Rear Bracket	9317651004	
25	Evaporator Holder R	9317650007	
26	Evaporator Holder L	9317649001	
27	Holder (Room Thermistor)	9316895003	
28	Thermistor Assy	9900563004	

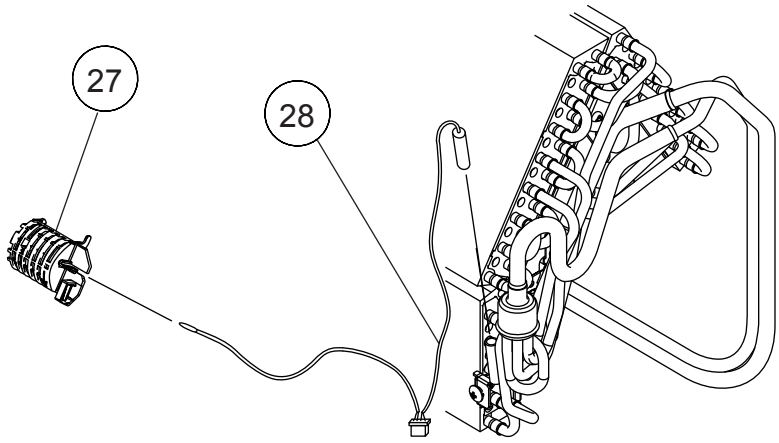

INDOOR UNIT
COMPACT WALL MOUNTED
ASYG07LJCA
ASYG09LJCA
ASYG12LJCA

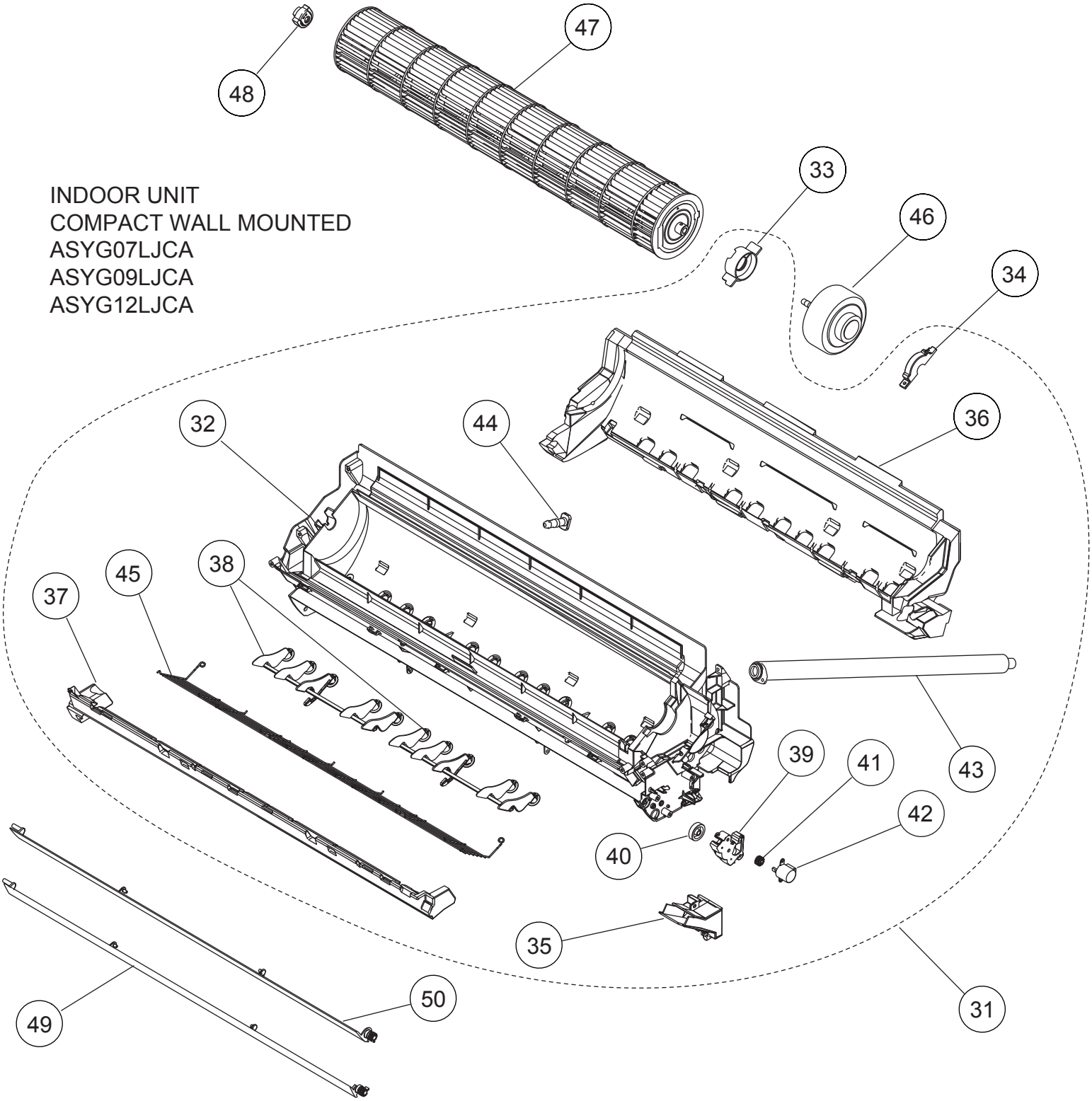

Ref	Description	Parts number	
31	Casing Assy	9318264050	
32	Casing	9317647014	
33	Motor Cover	9316568006	
34	Motor Cover	9316601000	
35	Cable Guide	9316567009	
36	Casing Cover B	9317653015	
37	Casing Cover F	9317654005	
38	R AND L Louver B	9316961012	
39	Louver Gear Holder	9317669016	
40	Louver Gear	9317648004	

Ref	Description	Parts number	
41	Gear A	9309994003	
42	Motor Step	9900384128	
43	Drain Hose Assy	9316904002	
44	Drain Cap	9316177017	
45	Fan Guard	9332277005	
46	Fan Motor	9602704002	
47	Crossflow Fan Assy	9316830004	
48	Bearing C Assy	9306628017	
49	Louver U	9317656016	
50	Louver Z	9317657006	

INDOOR UNIT
COMPACT WALL MOUNTED
ASYG07LJCA
ASYG09LJCA
ASYG12LJCA

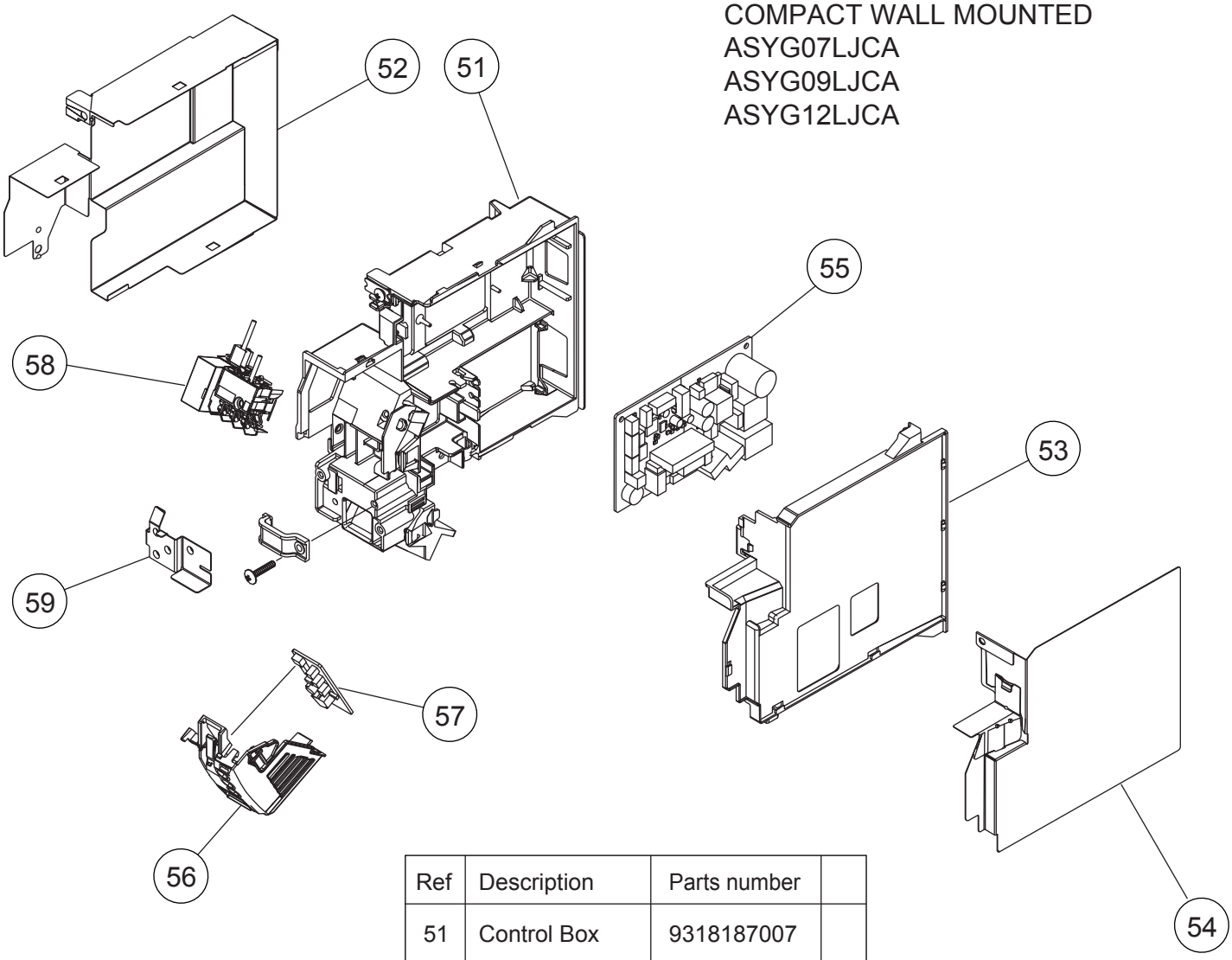

Ref	Description	Parts number	
51	Control Box	9318187007	
52	Box Shield	9317575010	
53	Control Cover	9317659017	
54	Cover Shield	9317923002	
55	Main PCB (07)	9708536378	
55	Main PCB (09)	9708536385	
55	Main PCB (12)	9708536392	
56	Display Case	9317662000	
57	Indicator PCB	9707649024	
58	Terminal	9900529017	
59	Earth Terminal	9316586000	

INDOOR UNIT
COMPACT WALL MOUNTED
ASYG07LUCA
ASYG09LUCA
ASYG12LUCA
ASYG14LUCA

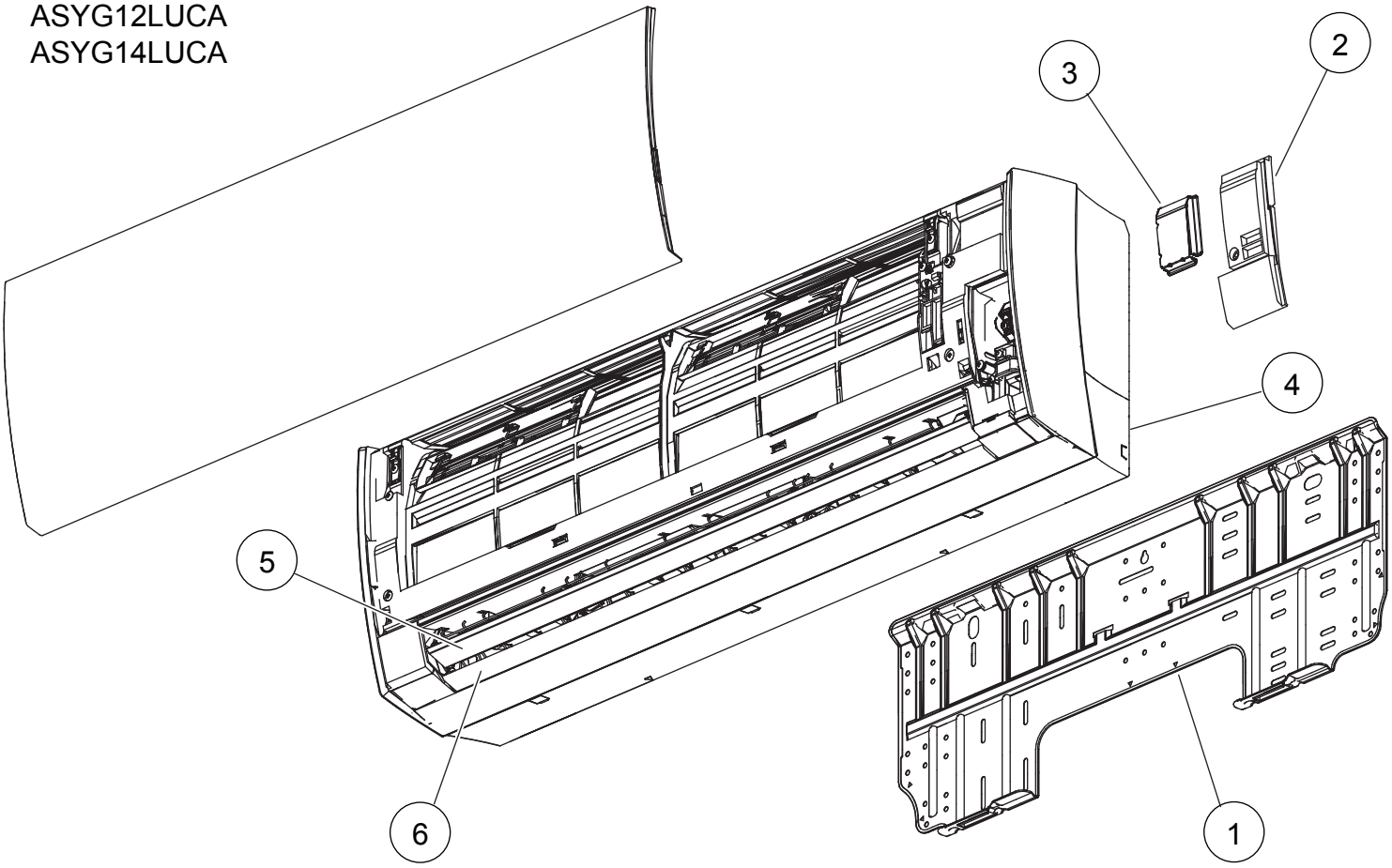

Ref.	Description	Part number	
1	Bracket Panel	9318913002	
2	Wire Cover	9318911008	
3	Wire Shield	9318919004	
4	Under Cover	9318879001	
5	Louver U	9318880007	
6	Louver Z	9318881004	
7	Remote Control	9319207018	
8	Remote Control Holder	9318912005	
--	Air Clean Filter Assy	9317250009	

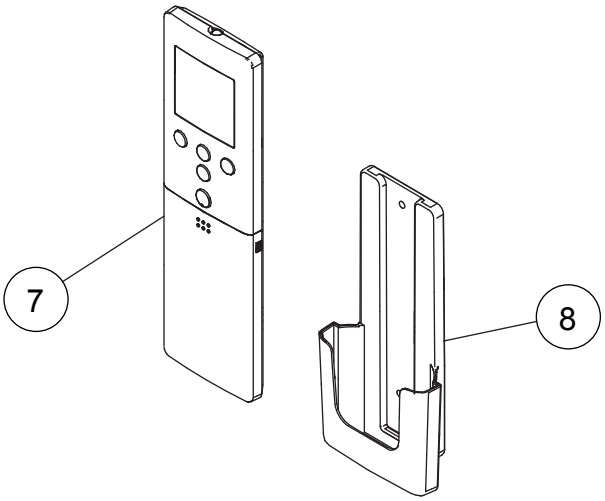

INDOOR UNIT
COMPACT WALL MOUNTED
ASYG07LUCA
ASYG09LUCA
ASYG12LUCA
ASYG14LUCA
Front panel

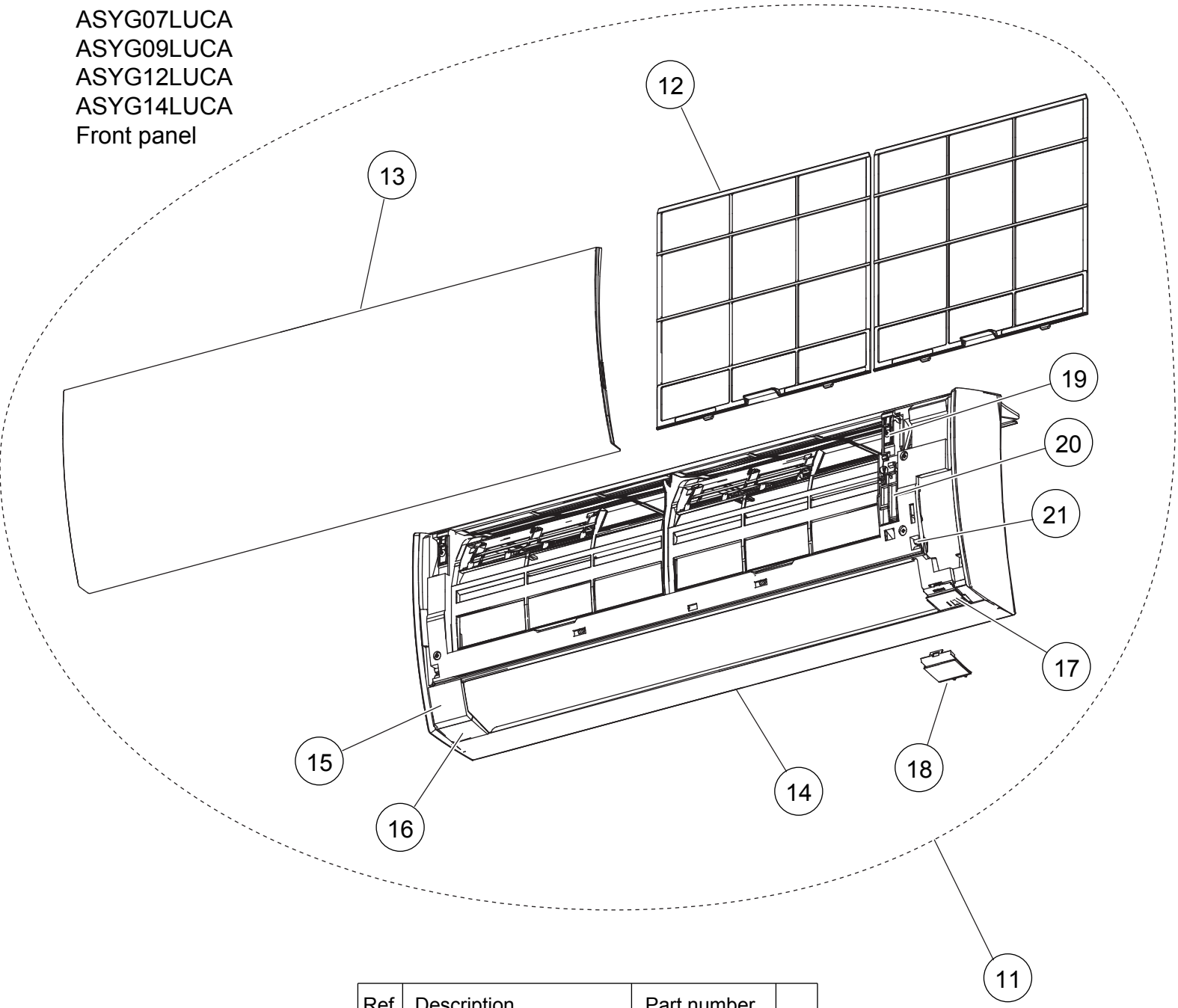

Ref.	Description	Part number	
11	Front Panel Total Assy	9319348001	
12	Air Filter	9318883008	
13	Intake Grille Assy	9319351001	
14	Front Panel	9318876000	
15	Front Panel Cover U	9318910001	
16	Display Plate Holder L	9318894004	
17	Display Plate Holder R	9318895001	
18	Display Plate R	9318893007	
19	Arm Cover	9318900002	
20	Grille Stay	9318899009	
21	Grille Clamper B	9316951006	

INDOOR UNIT
COMPACT WALL MOUNTED
ASYG07LUCA
ASYG09LUCA
ASYG12LUCA
ASYG14LUCA
Evaporator

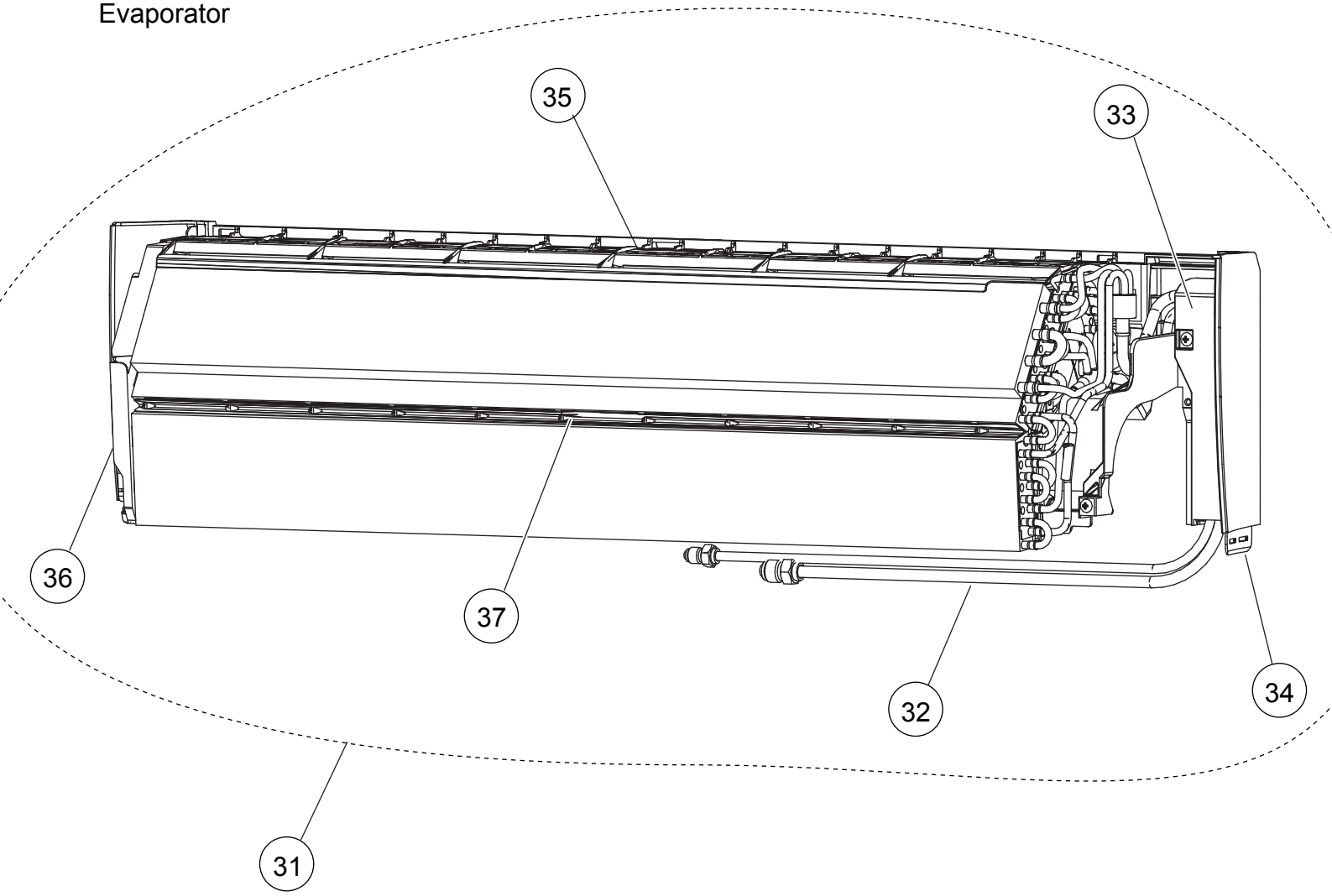

Ref.	Description	Part number	
31	Evaporator Total Assy (07,09,12)	9319327006	
31	Evaporator Total Assy (14)	9319327013	
32	Joint Pipe Assy (07, 09, 12)	9319322001	
32	Joint Pipe Assy (14)	9319322018	
33	Joint Pipe Holder	9318901009	
34	Base	9318874006	
35	Filter Guide	9318887006	
36	Evaporator Holder L	9318875003	
37	Air Seal	9319295008	

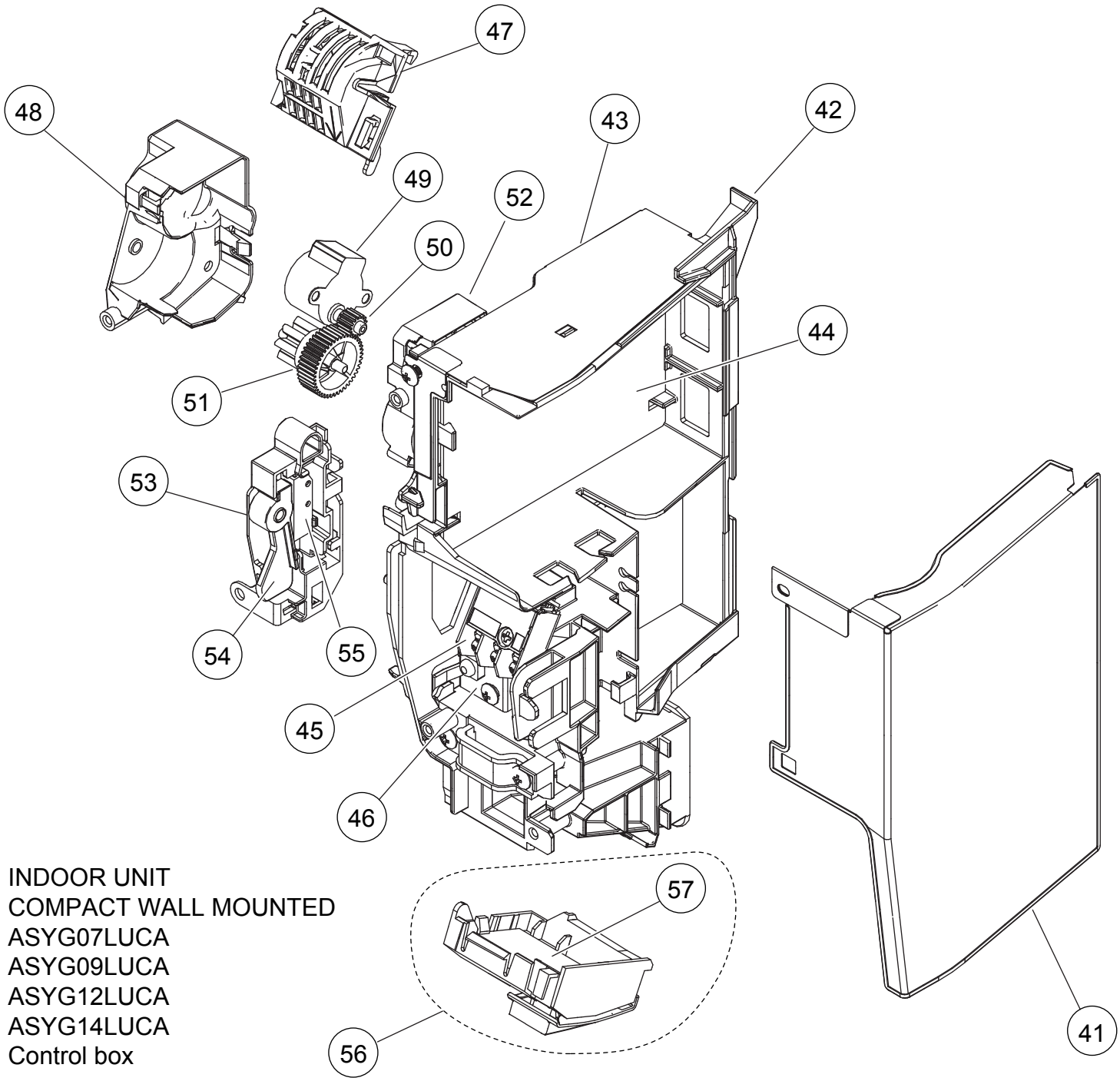

INDOOR UNIT
COMPACT WALL MOUNTED
ASYG07LUCA
ASYG09LUCA
ASYG12LUCA
ASYG14LUCA
Control box

Ref.	Description	Part number	
41	Cover Shield A	9318916003	
42	Control Box	9318882001	
43	Box Shield Assy	9319344003	
44	Main PCB (07)	9708713281	
44	Main PCB (09)	9708713298	
44	Main PCB (12)	9708713304	
44	Main PCB (14)	9708713311	
45	Terminal	9900638009	
46	Earth Terminal	9318918007	
47	Room Thermistor Holder	9319068008	
48	Gear Cover	9318902006	

Ref.	Description	Part number	
49	Step Motor	9900384166	
50	Gear B	9319294001	
51	Panel Gear	9319293004	
52	Gear Case	9318903003	
53	Switch Case	9319332000	
54	Grille Key Top	9319334004	
55	Micro Switch	9900625009	
56	Display Assy	9708823010	
57	Indicator PCB	9708824017	
--	Thermistor Assy	9900627003	

INDOOR UNIT
COMPACT WALL MOUNTED
ASYG07LUCA
ASYG09LUCA
ASYG12LUCA
ASYG14LUCA
Casing assy

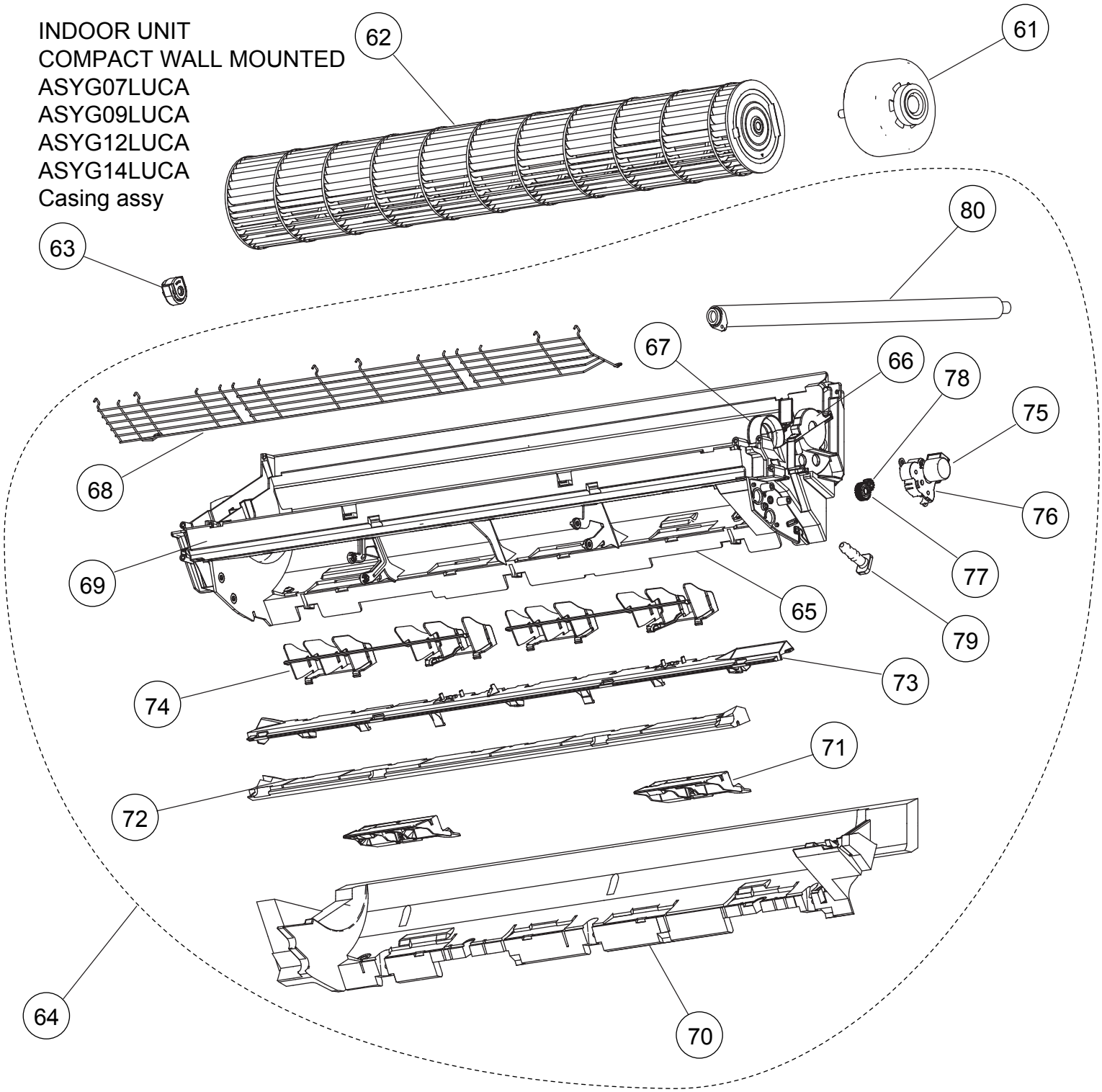

Ref.	Description	Part number	
61	Fan Motor	9602947003	
62	Crossflow Fan Assy	9319361000	
63	Bearing C Assy	9306628017	
64	Casing Assy	9319342009	
65	Casing	9318873009	
66	Motor Cover	9316601000	
67	Motor Cover	9318888003	
68	Fan Guard	9318924008	
69	Casing Cover F	9318923001	
70	Casing Cover B	9318920000	

Ref.	Description	Part number	
71	Pipe Bracket	9318889000	
72	Panel Cover	9319296005	
73	Louver Holder	9318886009	
74	R and L Louver	9318885002	
75	Motor Step	9900384128	
76	Louver Gear Holder	9318905007	
77	Louver Gear	9318904000	
78	Gear A	9309994003	
79	Drain Cap	9316177017	
80	Drain Hose Assy	9316904002	

INDOOR UNIT
COMPACT WALL MOUNTED
ASYG07LMCA
ASYG09LMCA
ASYG12LMCA
ASYG14LMCA

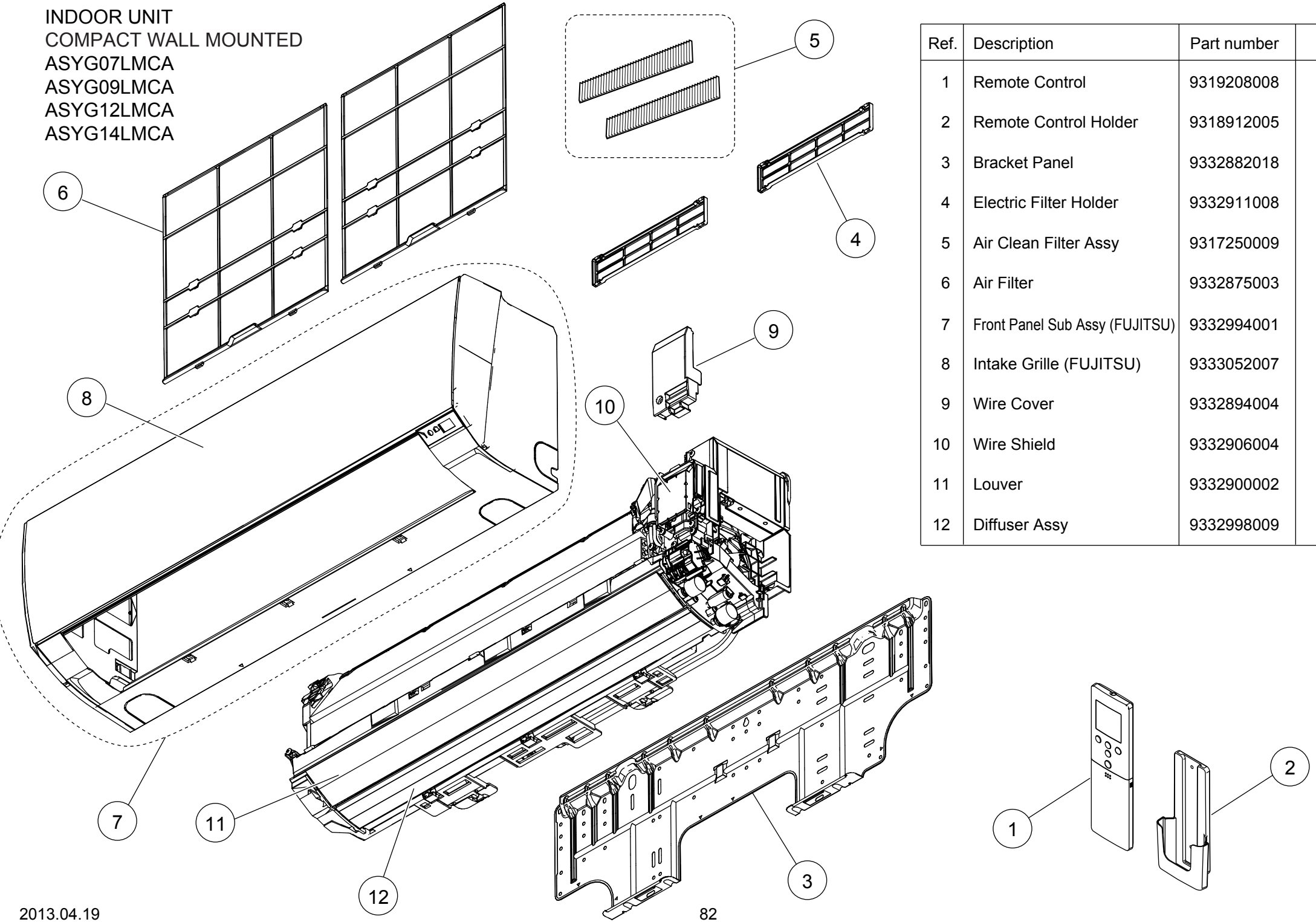

Ref.	Description	Part number	
1	Remote Control	9319208008	
2	Remote Control Holder	9318912005	
3	Bracket Panel	9332882018	
4	Electric Filter Holder	9332911008	
5	Air Clean Filter Assy	9317250009	
6	Air Filter	9332875003	
7	Front Panel Sub Assy (FUJITSU)	9332994001	
8	Intake Grille (FUJITSU)	9333052007	
9	Wire Cover	9332894004	
10	Wire Shield	9332906004	
11	Louver	9332900002	
12	Diffuser Assy	9332998009	

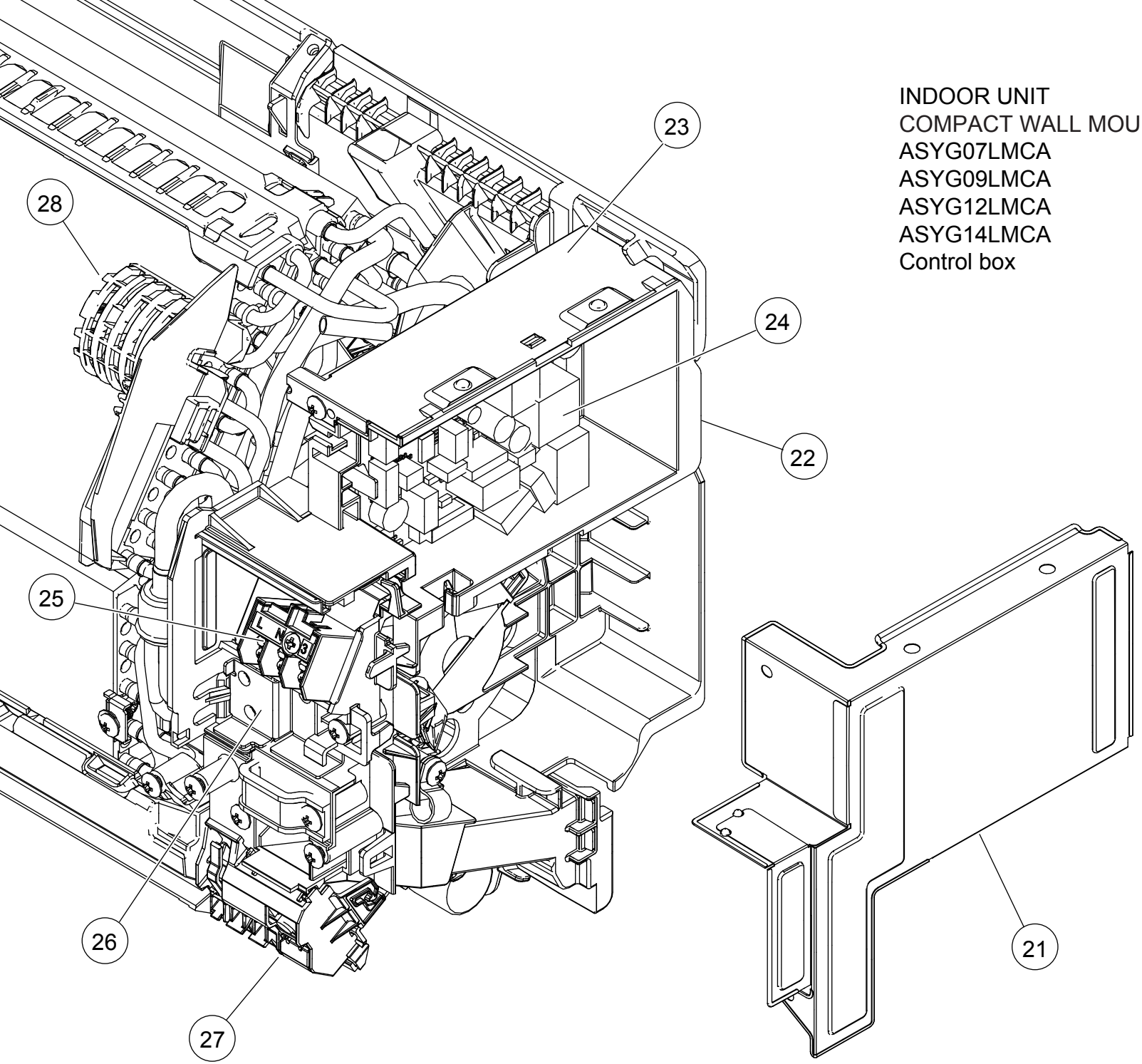

INDOOR UNIT
COMPACT WALL MOUNTED
ASYG07LMCA
ASYG09LMCA
ASYG12LMCA
ASYG14LMCA
Control box

Ref.	Description	Part number	
21	Cover Shield	9332915006	
22	Control Box	9332892000	
23	Box Shield Assy	9332877007	
24	Main PCB (07)	9709427033	
24	Main PCB (09)	9709427019	
24	Main PCB (12)	9709427026	
24	Main PCB (14)	9709427040	
25	Terminal	9900720001	
26	Earth Terminal	9332880007	
27	Display Assy	9709430019	
28	Room Thermistor Holder	9332868005	
--	Thermistor Assy	9900714024	

INDOOR UNIT
COMPACT WALL MOUNTED
ASYG07LMCA
ASYG09LMCA
ASYG12LMCA
ASYG14LMCA
Evaporator
Fan

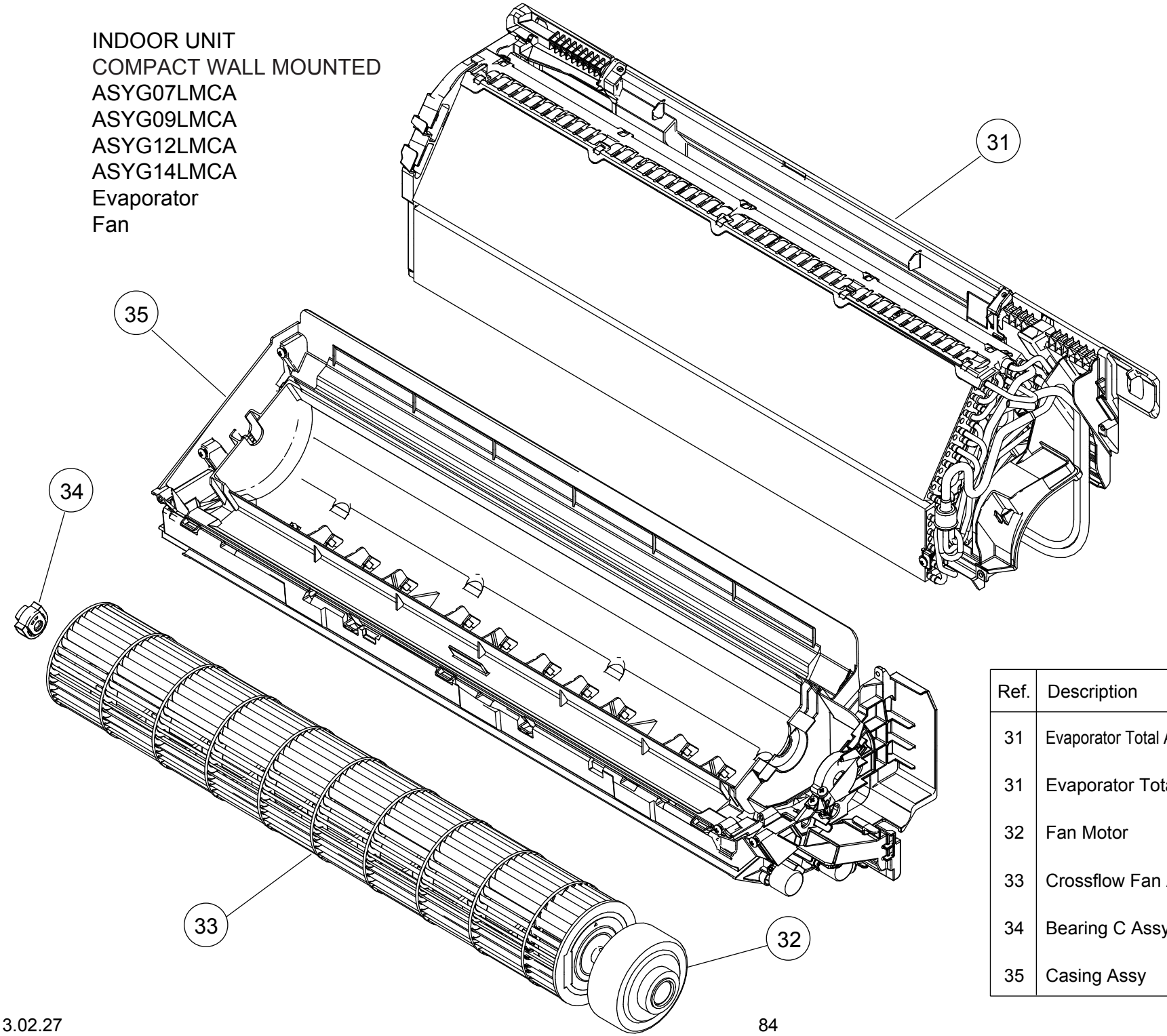

Ref.	Description	Part number	
31	Evaporator Total Assy (07, 09, 12)	9332989007	
31	Evaporator Total Assy (14)	9332989014	
32	Fan Motor	9603269005	
33	Crossflow Fan Assy	9316830004	
34	Bearing C Assy	9306628017	
35	Casing Assy	9333009001	

INDOOR UNIT
COMPACT WALL MOUNTED
ASYG07LMCA
ASYG09LMCA
ASYG12LMCA
ASYG14LMCA
Casing assy

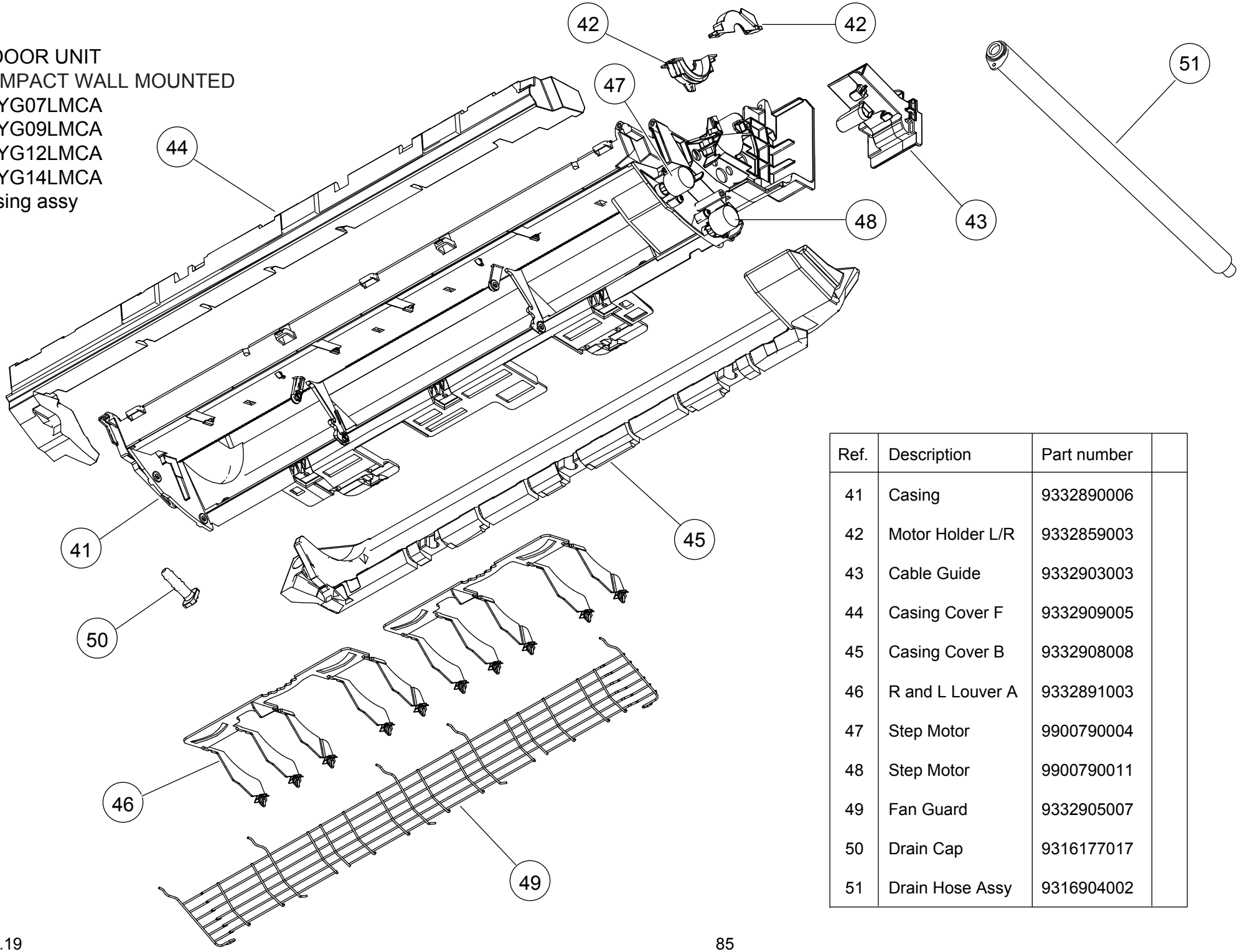

Ref.	Description	Part number	
41	Casing	9332890006	
42	Motor Holder L/R	9332859003	
43	Cable Guide	9332903003	
44	Casing Cover F	9332909005	
45	Casing Cover B	9332908008	
46	R and L Louver A	9332891003	
47	Step Motor	9900790004	
48	Step Motor	9900790011	
49	Fan Guard	9332905007	
50	Drain Cap	9316177017	
51	Drain Hose Assy	9316904002	

DECORATION PANEL
UTG-UFYD-W

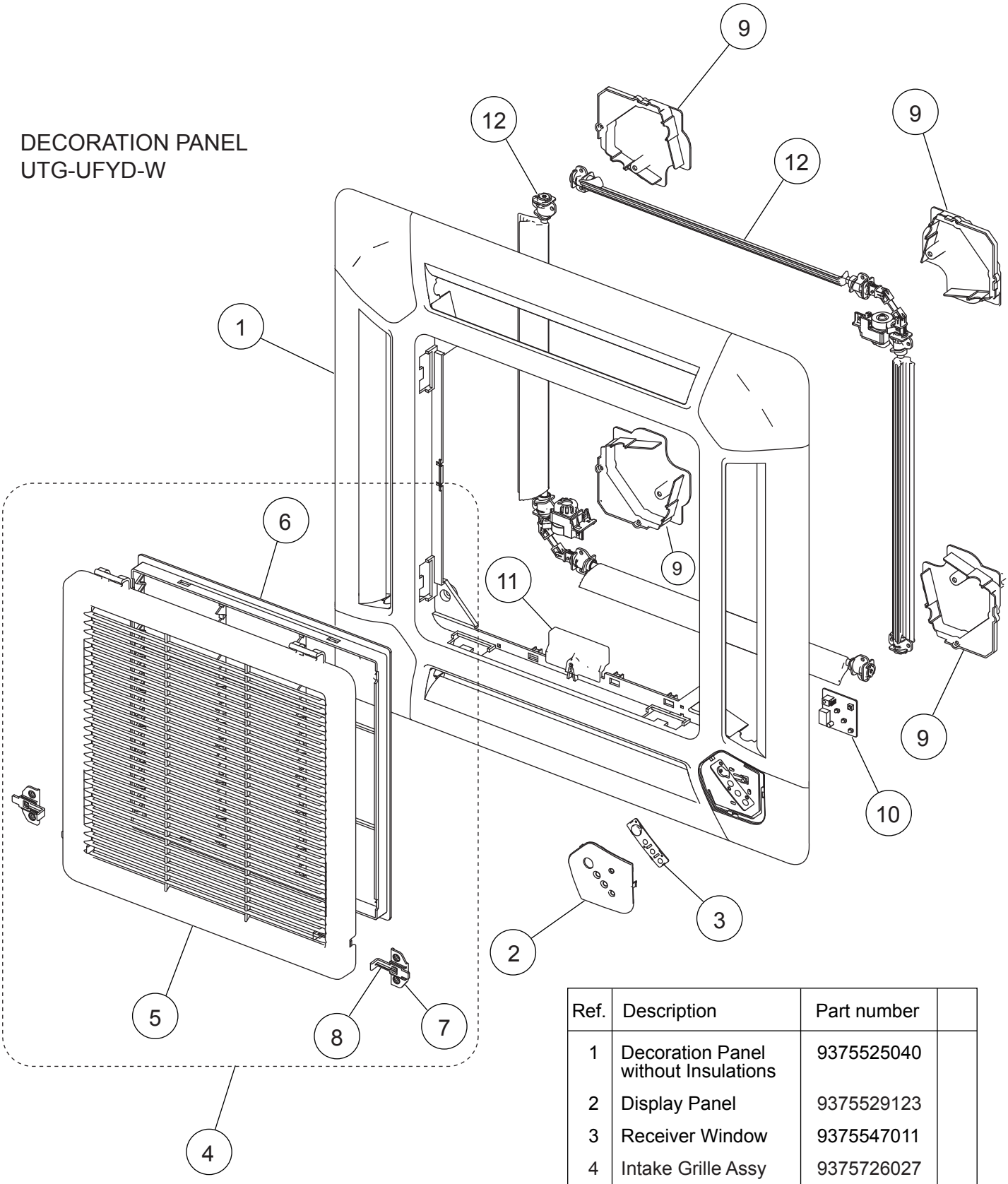

Ref.	Description	Part number	
1	Decoration Panel without Insulations	9375525040	
2	Display Panel	9375529123	
3	Receiver Window	9375547011	
4	Intake Grille Assy	9375726027	
5	Intake Grille	9375531027	
6	Long Life Filter	9375533014	
7	Hook Bracket	9375546014	
8	Grille Hook	9375532024	
9	Panel Cover without Insulations	9375530013	
10	Indicator PCB Assy	9707371031	
11	Connector Cover	9375549015	
12	Flap Total Assy	9377760029	

DECORATION PANEL
UTG-UFYD-W

Flap total assy
Motor holder assy

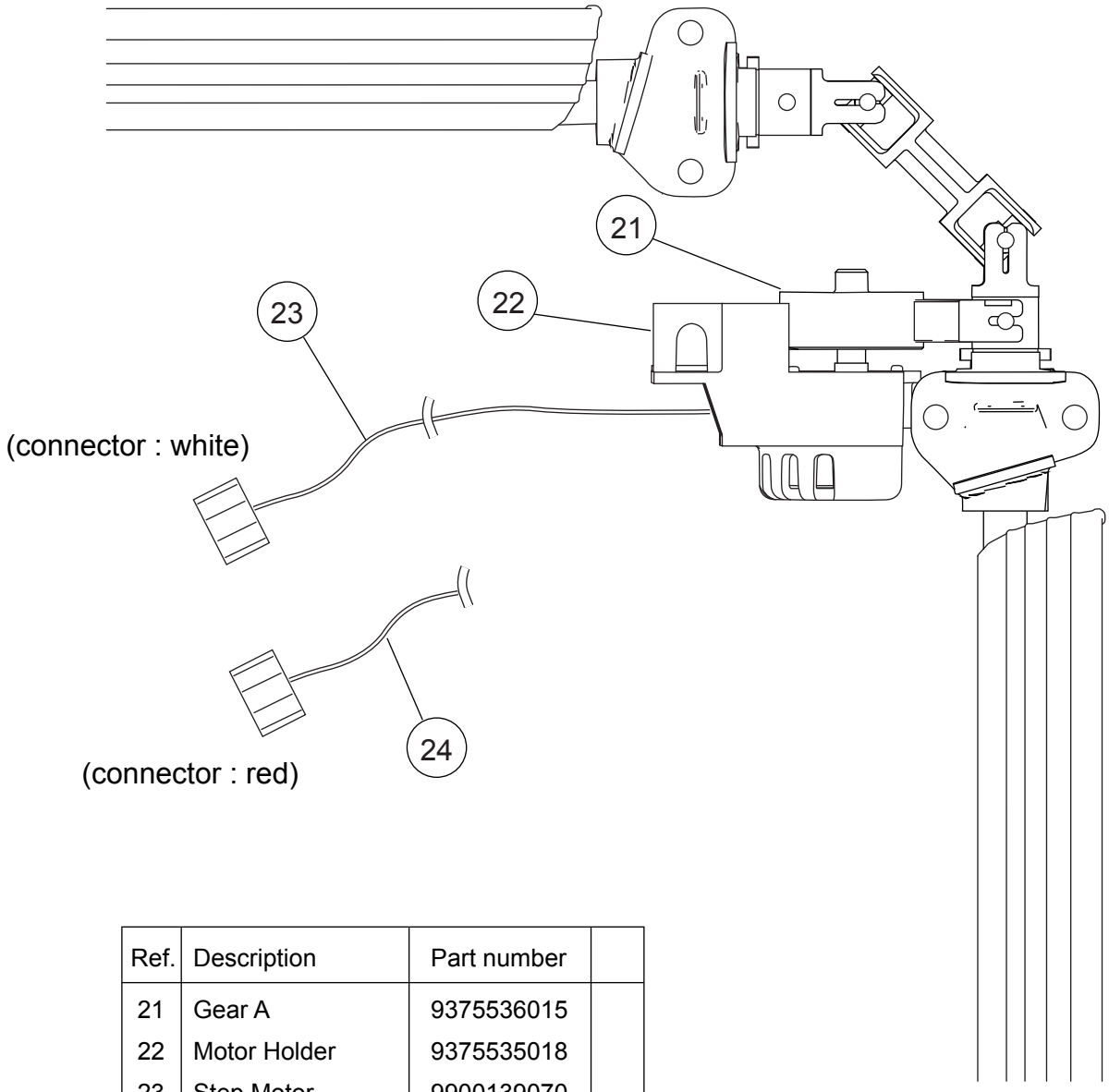

Ref.	Description	Part number	
21	Gear A	9375536015	
22	Motor Holder	9375535018	
23	Step Motor (white connector)	9900139070	
24	Step Motor (red connector)	9900139087	

INDOOR UNIT
COMPACT CASSETTE
AUYG07LVLA
AUYG09LVLA
AUYG12LVLA
AUYG12LVLB

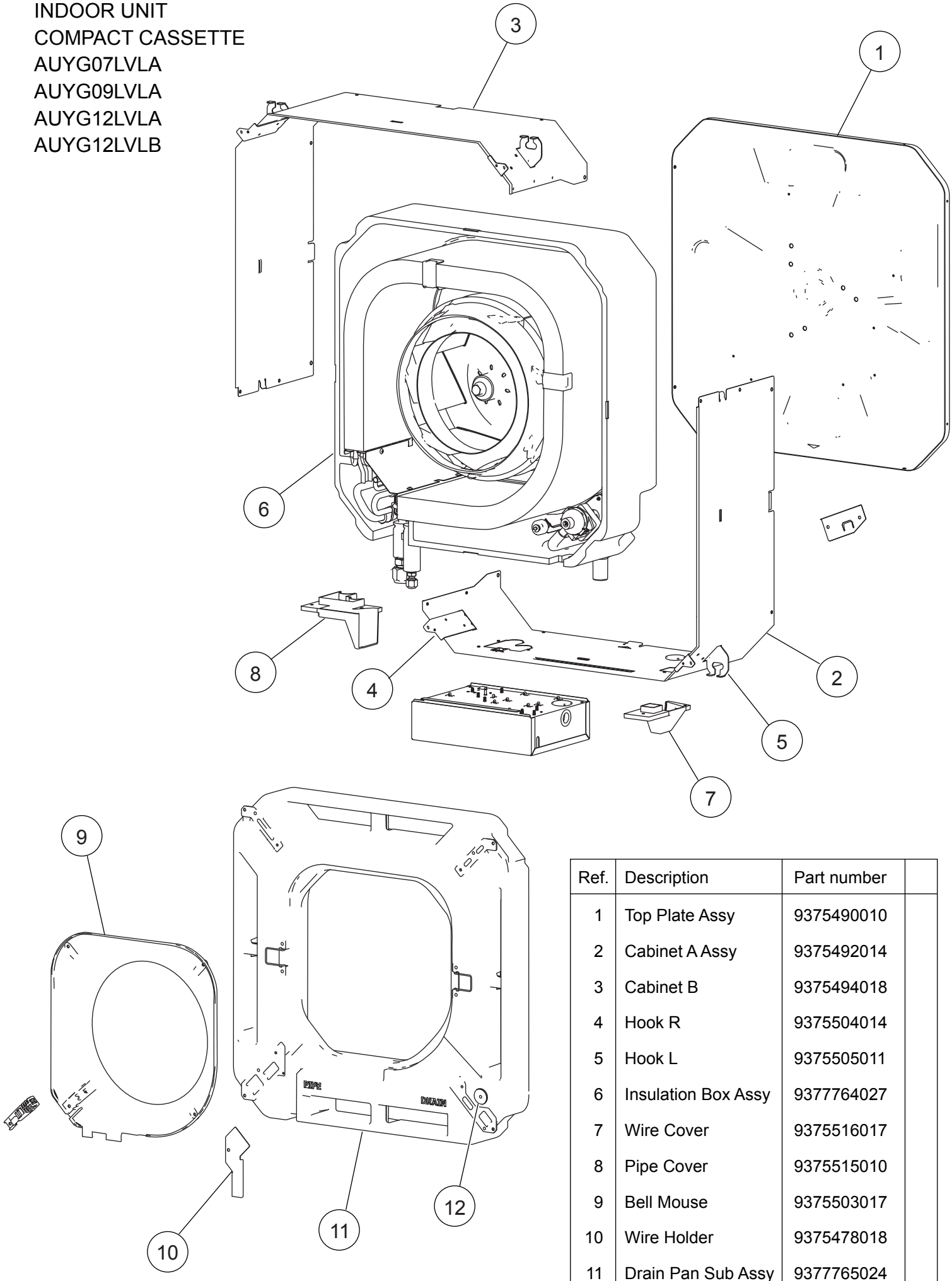

Ref.	Description	Part number	
1	Top Plate Assy	9375490010	
2	Cabinet A Assy	9375492014	
3	Cabinet B	9375494018	
4	Hook R	9375504014	
5	Hook L	9375505011	
6	Insulation Box Assy	9377764027	
7	Wire Cover	9375516017	
8	Pipe Cover	9375515010	
9	Bell Mouse	9375503017	
10	Wire Holder	9375478018	
11	Drain Pan Sub Assy	9377765024	
12	Drain Cap	9375502010	

INDOOR UNIT
COMPACT CASSETTE
AUYG07LVLA
AUYG09LVLA
AUYG12LVLA
AUYG12LVLB

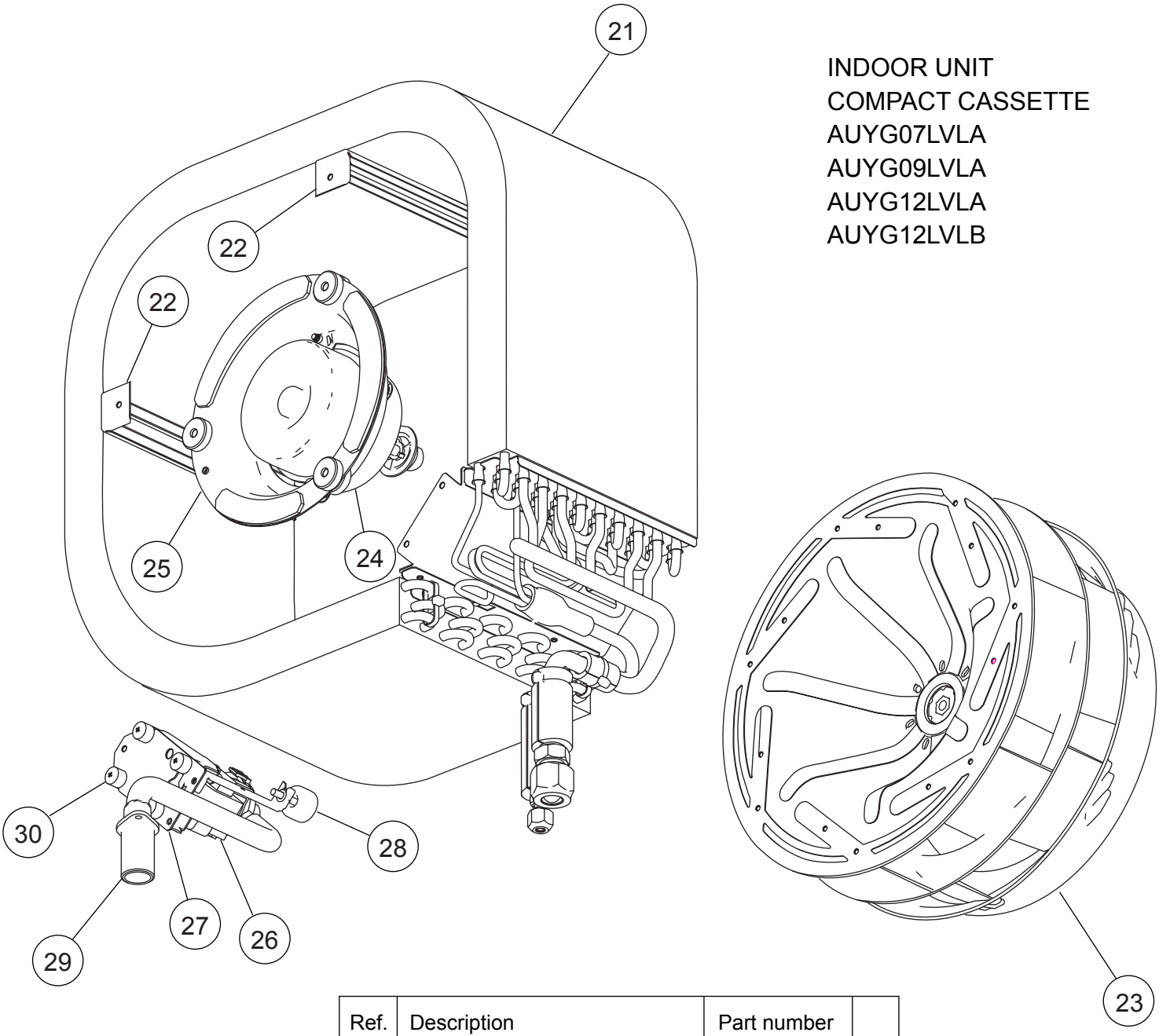

Ref.	Description	Part number	
21	Evaporator Total Assy (07)	9375720087	
21	Evaporator Total Assy (09, 12)	9375720032	
22	Evaporator Holder	9375508012	
23	2 Stage Turbo Fan Assy	9375480011	
24	Fan Motor	9602436019	
25	Fan Motor Holder	9375552015	
26	Pump Assy	9900472030	
27	Drain Pump Holder B	9375518011	
28	Float Switch	9900361037	
29	Drain Port Sub Assy	9375718015	
30	Rubber (Pump)	9378426016	

INDOOR UNIT
COMPACT CASSETTE
AUYG07LVLA
AUYG09LVLA
AUYG12LVLA
AUYG12LVLB
Control unit

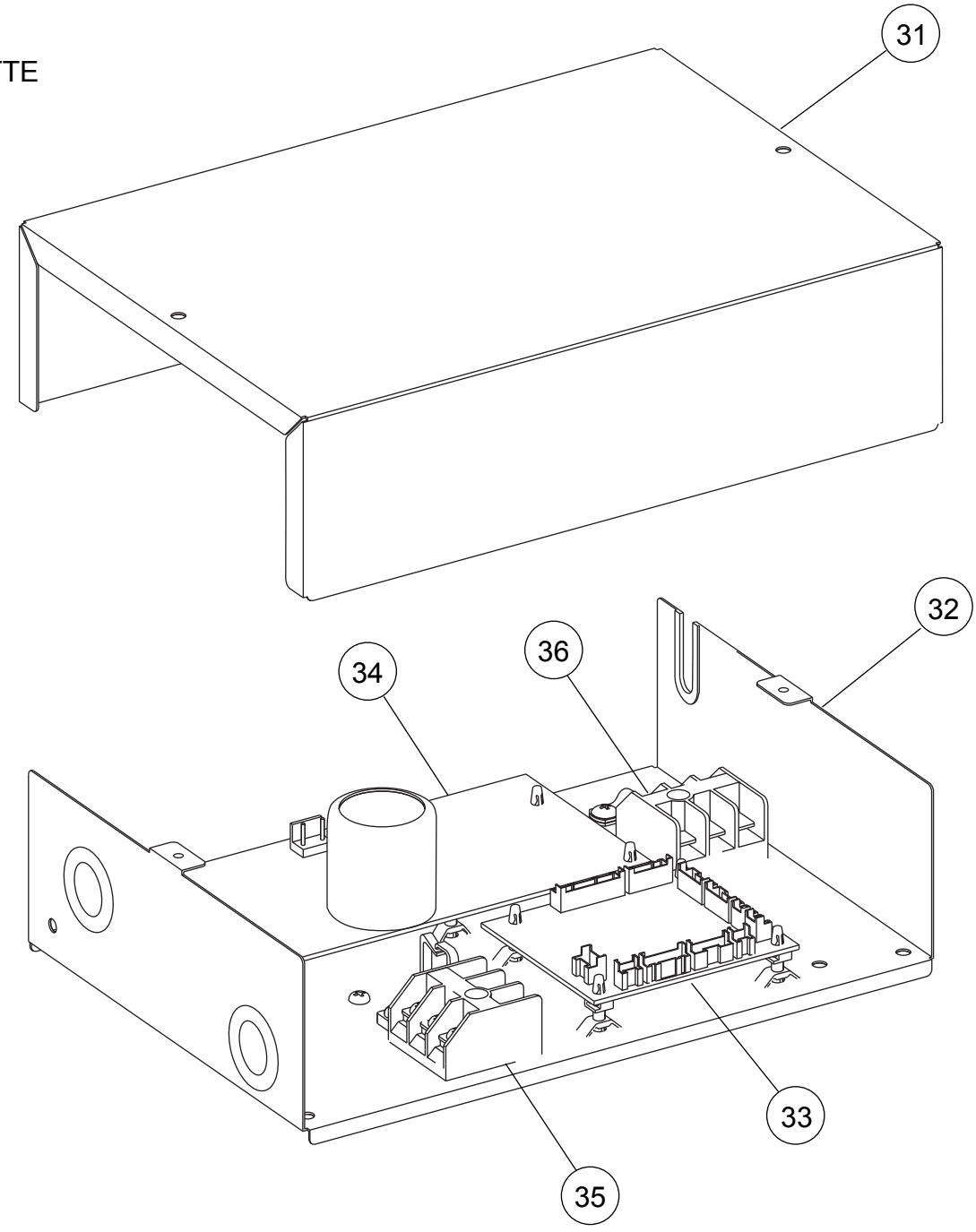

Ref.	Description	Part number	
31	Control Box Cover	9375512019	
32	Control Box A	9375511012	
33	Main PCB (07)	9707393736	
33	Main PCB (09)	9707393743	
33	Main PCB (12LVLA)	9707393750	
33	Main PCB (12LVLB)	9709245422	

Ref.	Description	Part number	
34	Power Supply PCB (LVLA)	9707398250	
34	Power Supply PCB (LVLB)	9707398380	
35	Terminal	9306489045	
36	Terminal	9703345012	
--	Pipe Thermistor	9703297014	
--	Room Thermistor	9900502003	
--	Remote Control	9379219006	
--	Remote Control Holder	9305642045	

INDOOR UNIT
FLOOR
AGYG09LVCA
AGYG12LVCA

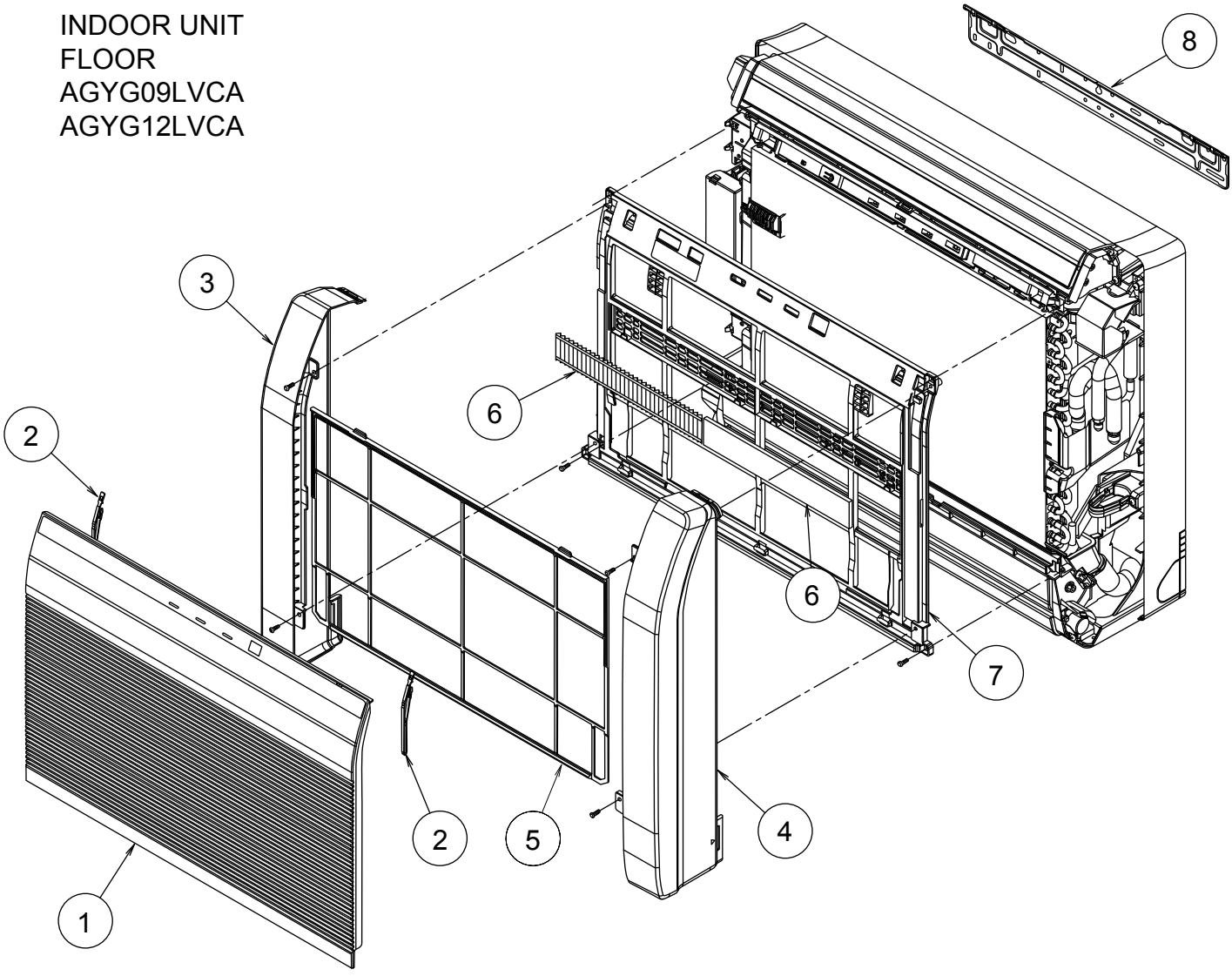

Ref	Description	Parts number	
1	Intake Grille Assy	9316418059	
2	Rope Assy	9316458017	
3	Panel (Front) L	9316187016	
4	Panel (Front) R	9316186019	
5	Air Filter	9316189010	
6	Air Clean Filter Assy	9316474017	
7	Panel (Front)	9316185012	
8	Bracket Panel	9316272019	
--	Remote Control	9379219006	
--	Remote Control Holder	9305642045	

INDOOR UNIT
FLOOR
AGYG09LVCA
AGYG12LVCA

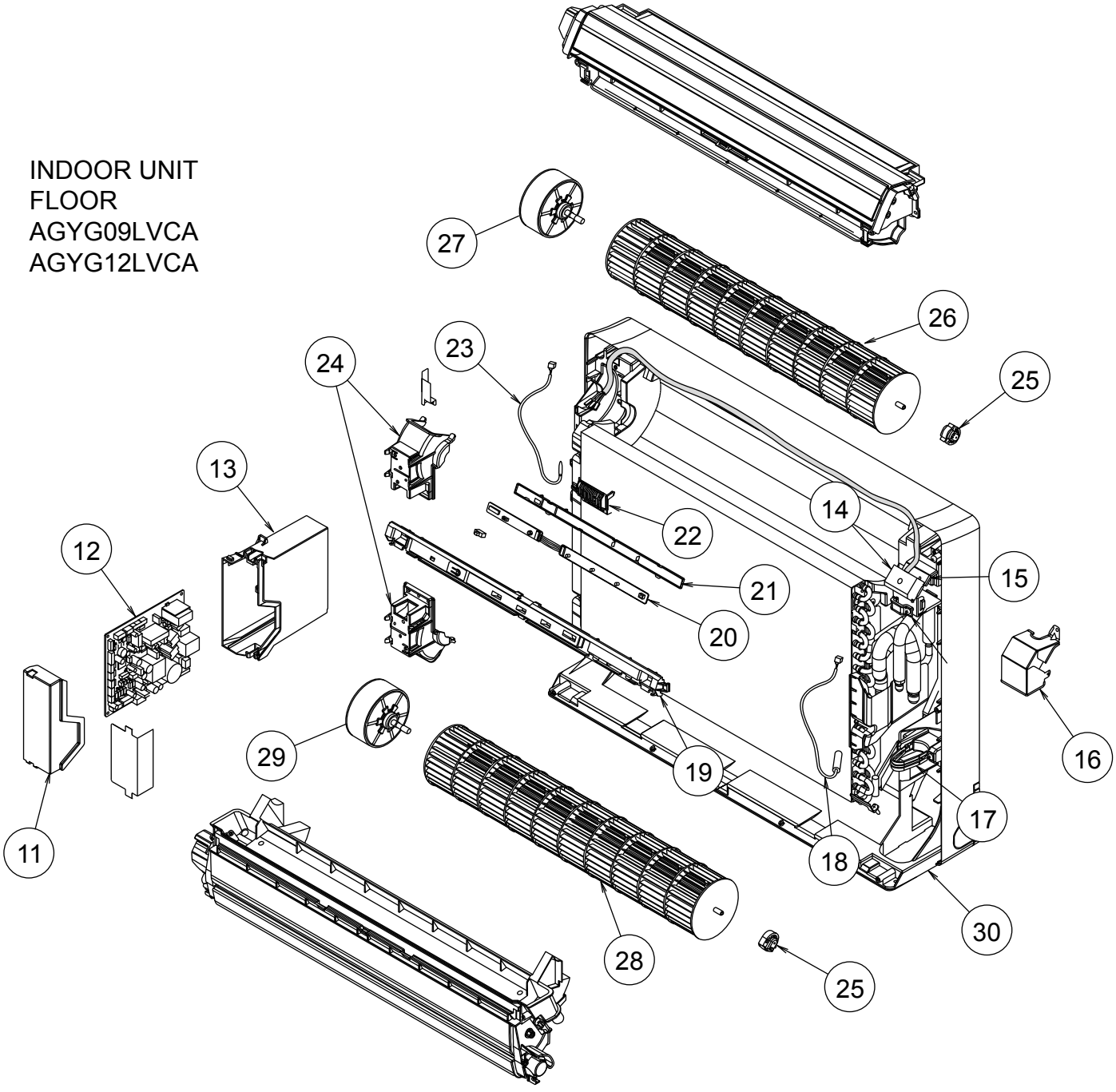

Ref	Description	Parts number	
11	Control Cover	9316201019	
12	Main PCB (09)	9708532011	
12	Main PCB (12)	9708532028	
13	Control Box	9316200012	
14	Terminal	9900385026	
15	Bracket (Terminal)	9316269019	
16	Cover (Terminal)	9316307018	
17	Bracket (Pipe)	9316270015	
18	Pipe Thermistor	9900425012	
19	Display Case	9316194014	

Ref	Description	Parts number	
20	Display PCB Assy	9707571042	
21	Display Cover	9316191013	
22	Thermistor Holder	9316192010	
23	Room Thermistor	9700801108	
24	Motor Holder	9316195011	
25	Bearing C Assy	9306628017	
26	Crossflow Fan Assy	9312004034	
27	Fan Motor, MFD-34TXN	9602850006	
28	Crossflow Fan B Assy	9316309012	
29	Fan Motor, MFD-14SXN	9602851003	
30	Base	9316193017	

INDOOR UNIT
FLOOR
AGYG09LVCA
AGYG12LVCA

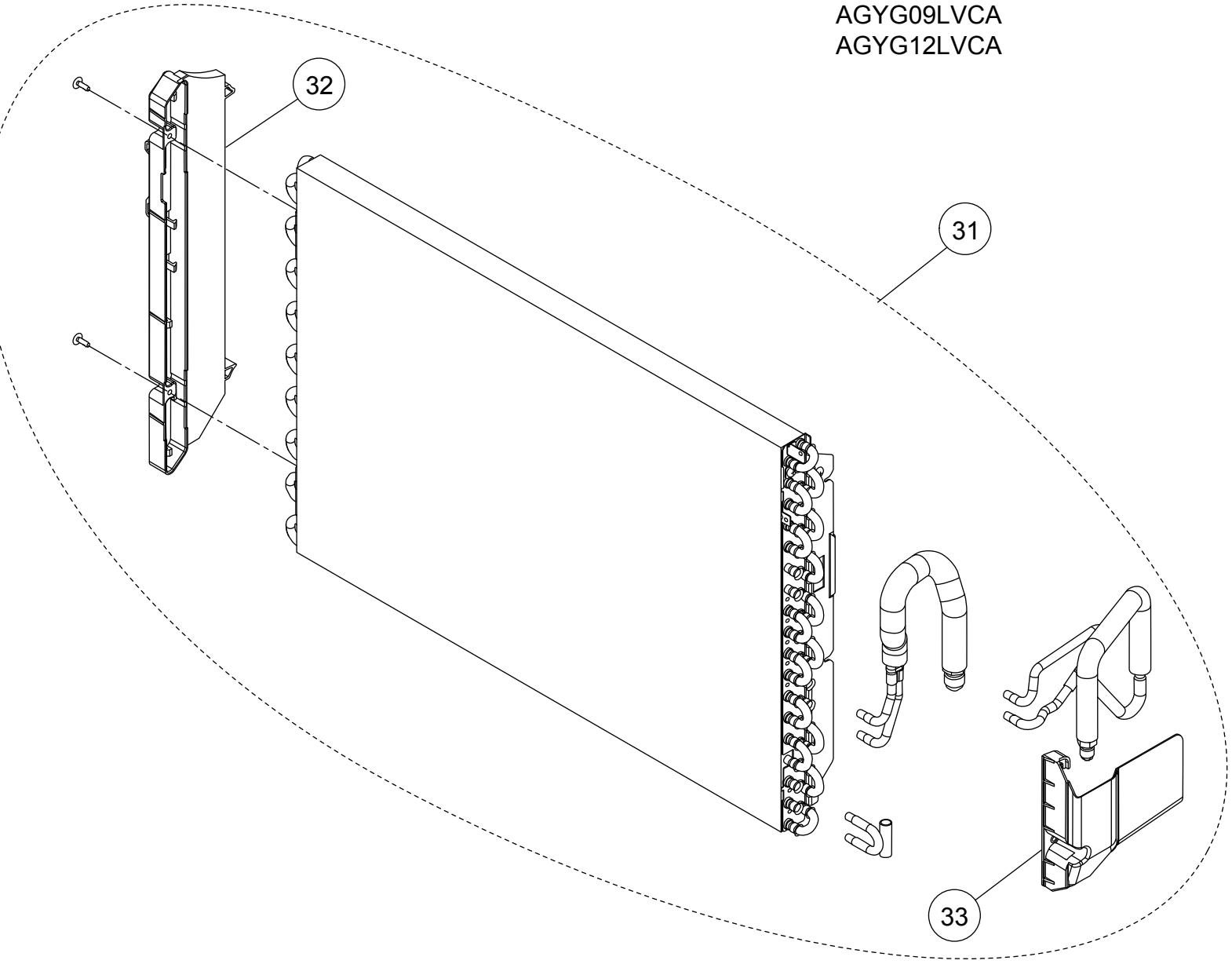

Ref	Description	Parts number	
31	Evaporator Total Assy	9316091016	
32	Evaporator Holder	9316199019	
33	Water Seal	9316271012	

INDOOR UNIT
FLOOR
AGYG09LVCA
AGYG12LVCA
Casing assy

Ref	Description	Parts number	
41	Top Cover	9316207011	
42	R and L Louver U	9316208018	
43	Fan Guard	9316211018	
44	Casing	9316204010	
45	Gear Case	9316213012	
46	Gear A	9309994003	
47	Motor Step (up / down)	9900384043	
48	Louver U	9316205017	
49	Louver Z	9316206014	
50	REF (Casing)	9316378018	

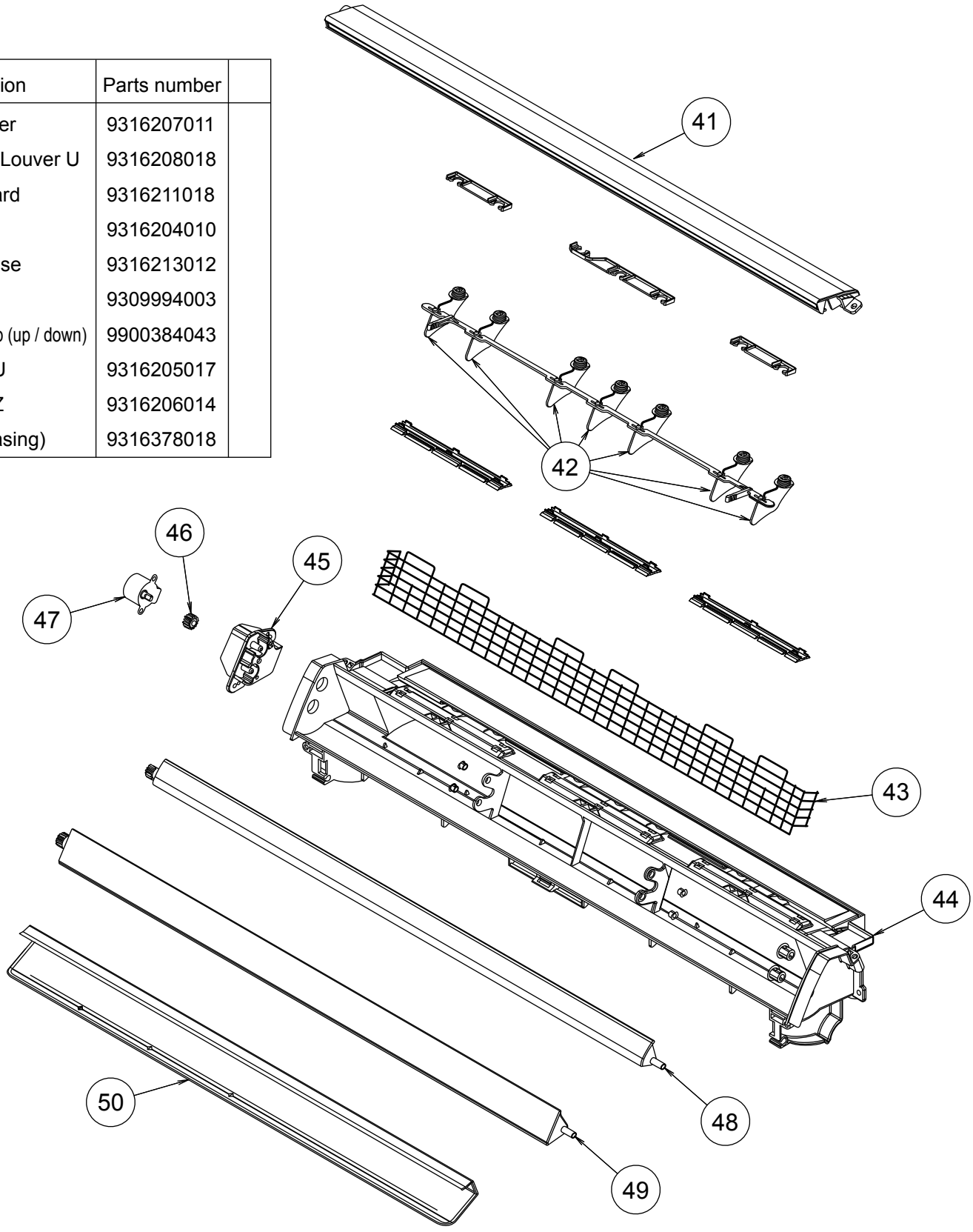

INDOOR UNIT
FLOOR
AGYG09LVCA
AGYG12LVCA
Casing aast

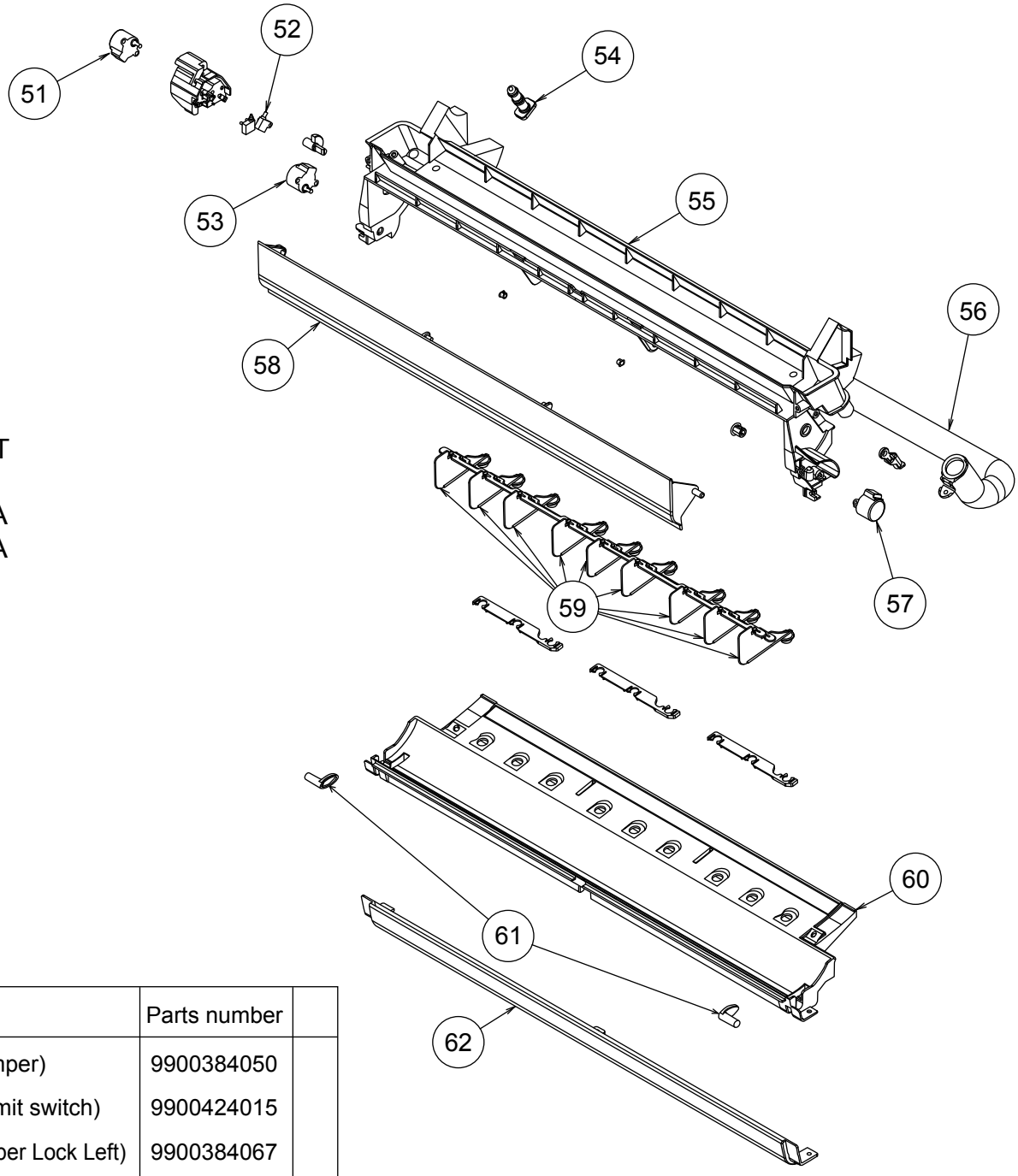

Ref	Description	Parts number	
51	Motor Step (Damper)	9900384050	
52	Switch Micro (Limit switch)	9900424015	
53	Motor Step (Damper Lock Left)	9900384067	
54	Drain Cap	9316177017	
55	Drain Pan U	9316214019	
56	Drain Hose Assy	9314147029	
57	Motor Step (Damper Lock Right)	9900384074	
58	Damper	9316216013	
59	R and L Louver Z	9316334014	
60	Drain Pan Z	9316215016	
61	Stopper	9316219014	
62	Cover (Lower)	9316374010	
--	Fan Guard Z	9316918009	

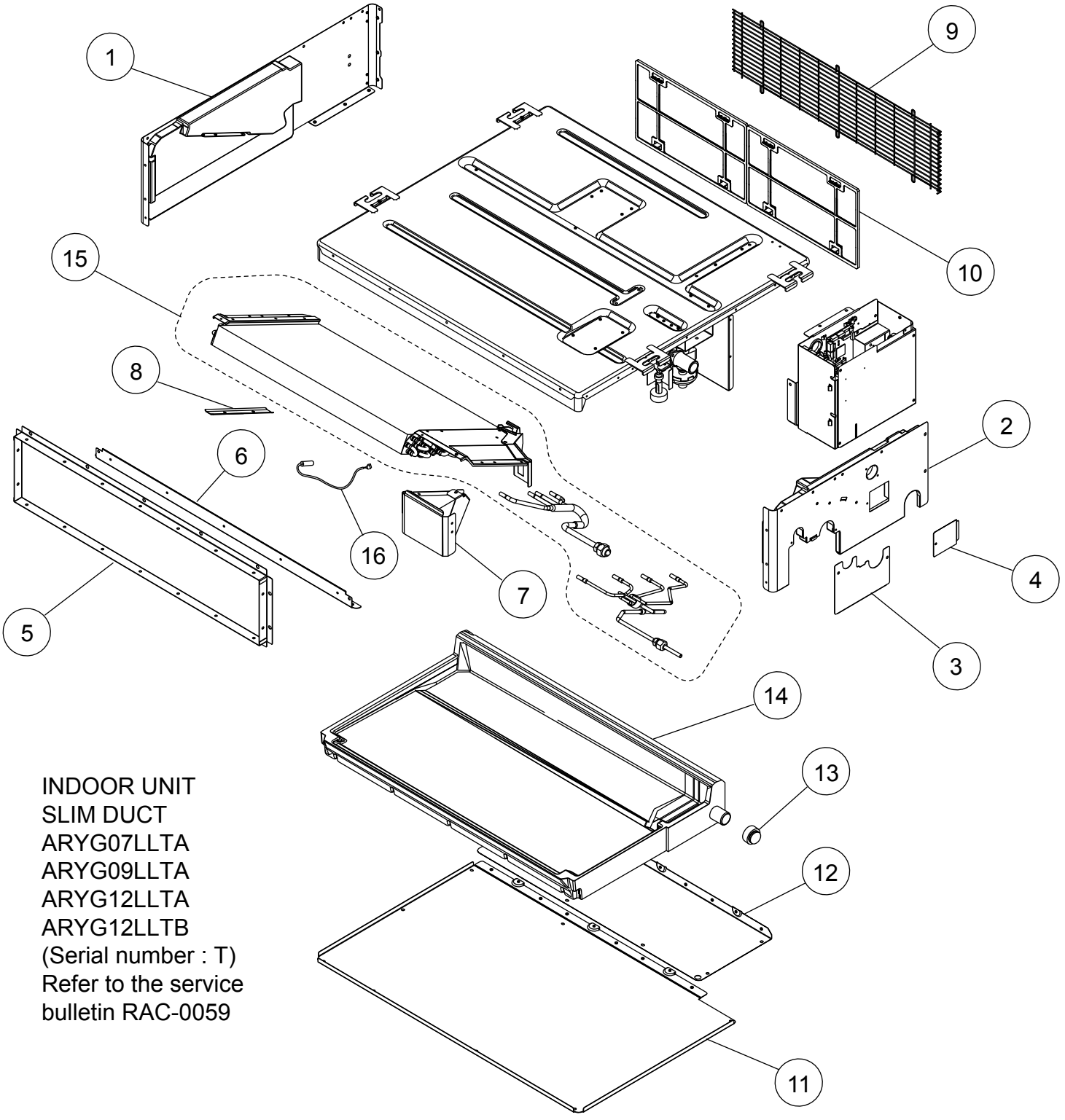

INDOOR UNIT
SLIM DUCT
ARYG07LLTA
ARYG09LLTA
ARYG12LLTA
ARYG12LLTB
(Serial number : T)
Refer to the service bulletin RAC-0059

Ref	Description	Parts number	
1	Side Panel R Sub Assy	9379906005	
2	Side Panel L Sub Assy	9379907002	
3	Pipe Panel Sub Assy	9379900003	
4	Panel (Window) Sub Assy	9379915007	
5	Outlet Frame Sub Assy	9379909006	
6	Front Panel (2 Fan)	9379593007	
7	Valve Cover Sub Assy	9379576000	
8	Cover Pipe Sub Assy	9380033004	
9	Fan Guard (2 Fan)	9379637008	
10	Air Filter	9379574006	

Ref	Description	Parts number	
11	Main Panel Sub Assy	9379902007	
12	Cabinet Panel (2 Fan)	9379596008	
13	Drain Cap	9358746004	
14	Drain Pan Sub Assy	9379901000	
15	Evaporater Total Assy (07)	9364499666	
15	Evaporater Total Assy (09, 12)	9364499581	
16	Pipe Thermistor	9900498085	
--	Hose Sub Assy	9378450103	

INDOOR UNIT
SLIM DUCT
ARYG07LLTA
ARYG09LLTA
ARYG12LLTA
ARYG12LLTB
(Serial number : T)

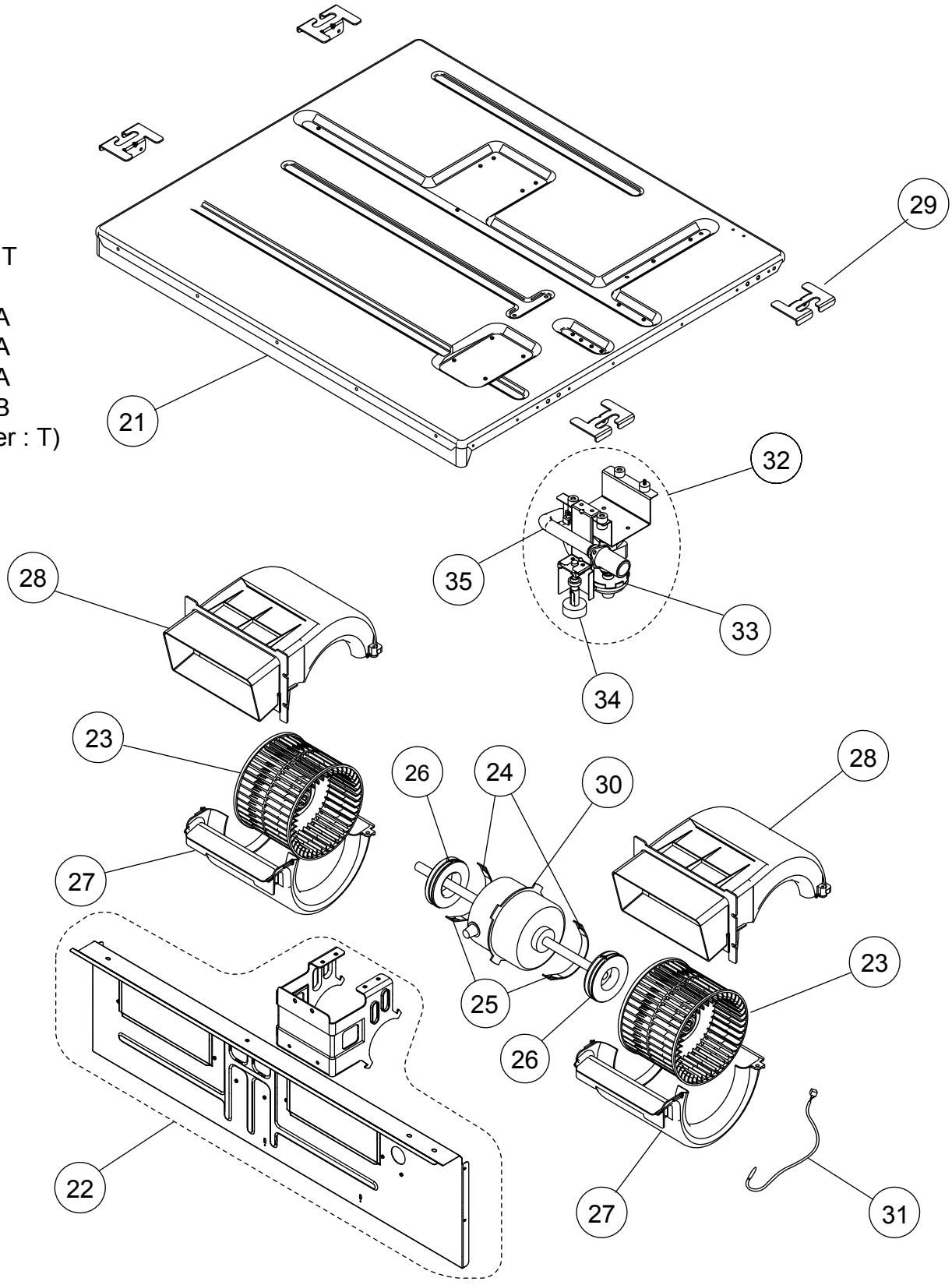

Ref	Description	Parts number	
21	Top Panel Sub Assy	9379908009	
22	Separator Sub Assy	9379898003	
23	Sirroco Fan Assy	9379570015	
24	Motor Band Assy	9379613002	
25	Motor Band	9379614009	
26	Rubber (Vibration Proof)	9379644006	
27	Casing B	9379572002	
28	Casing U	9379571005	

Ref	Description	Parts number	
29	Hook Metal	9379889001	
30	Fan Motor Assy (07)	9602966011	
30	Fan Motor Assy(09,12)	9602967018	
31	Room Thermistor	9703299247	
32	Drain Pump Sub Assy	9379914000	
33	Pump Assy	9900472047	
34	Float Switch	9900465032	
35	Drain Hose Assy	9379913003	

INDOOR UNIT
SLIM DUCT
ARYG07LLTA
ARYG09LLTA
ARYG12LLTA
ARYG12LLTB
(Serial number : T)

Ref	Description	Parts number	
41	Control Cover Sub Assy	9379806039	
42	Control Box Assy	9380041023	
43	PCB Holder	9379402002	
44	Power Supply PCB	9707398267	
45	Main PCB (07)	9707393781	
45	Main PCB (09)	9707393798	
45	Main PCB (12LLTA)	9707393804	
45	Main PCB (12LLTB)	9707393897	
46	Reactor Assy	9707457018	
47	Terminal 3P	9306489045	
48	Terminal 3P (Wired Remote)	9703345012	
49	Terminal Bracket	9380132011	
--	Wired Remote Control	9318593013	

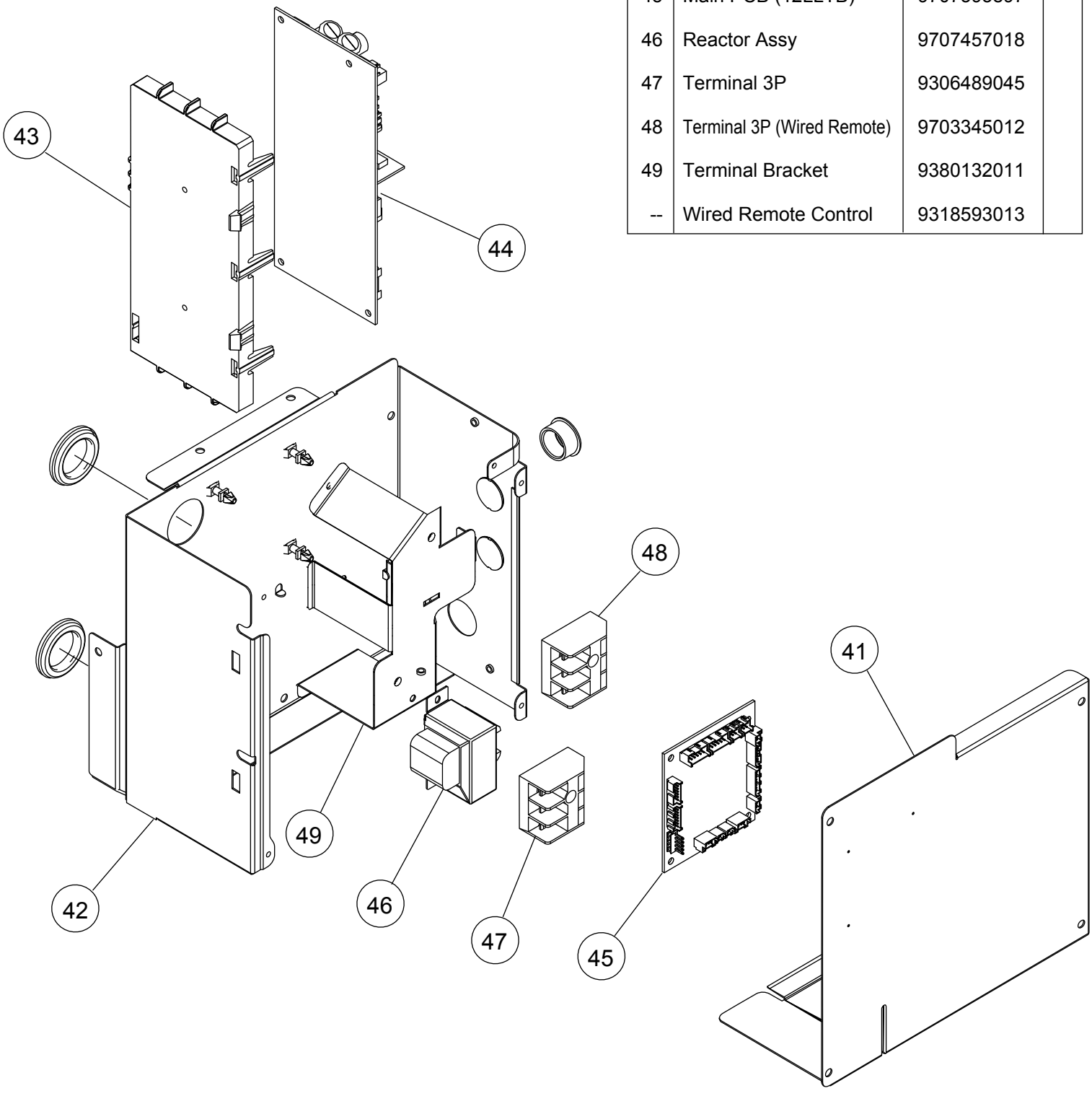

INDOOR UNIT
SLIM DUCT
ARYG07LLTA
ARYG09LLTA
ARYG12LLTB
(Serial number : R)
Refer to the service bulletin RAC-0059

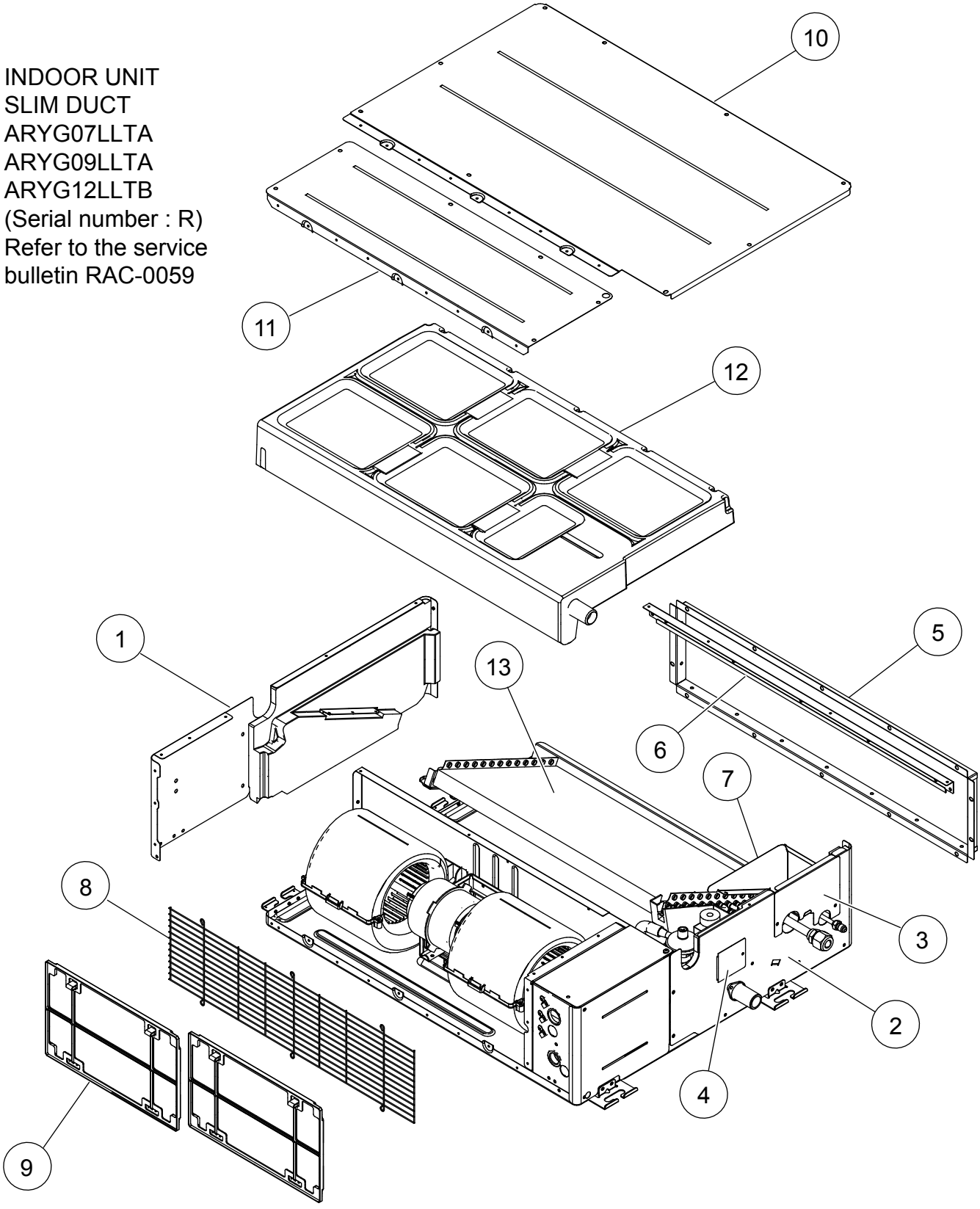

Ref	Description	Parts number	
1	Side Panel R Sub Assy	9379906012	
2	Side Panel L Sub Assy	9379907019	
3	Pipe Panel Sub Assy	9379900003	
4	Panel (Window) Sub Assy	9379915007	
5	Outlet Frame Assy	9380042006	
6	Front Panel (2 Fan)	9380594000	
7	Valve Cover Sub Assy	9379576017	
8	Fan Guard (2 Fan)	9380589006	

Ref	Description	Parts number	
9	Air Filter	9379574006	
10	Main Panel (2 Fan)	9380602002	
11	Cabinet Panel (2 Fan)	9380597001	
12	Drain Pan Sub Assy	9379901048	
13	Evaporater Total Assy (07)	9380682080	
13	Evaporater Total Assy (09, 12)	9380682042	

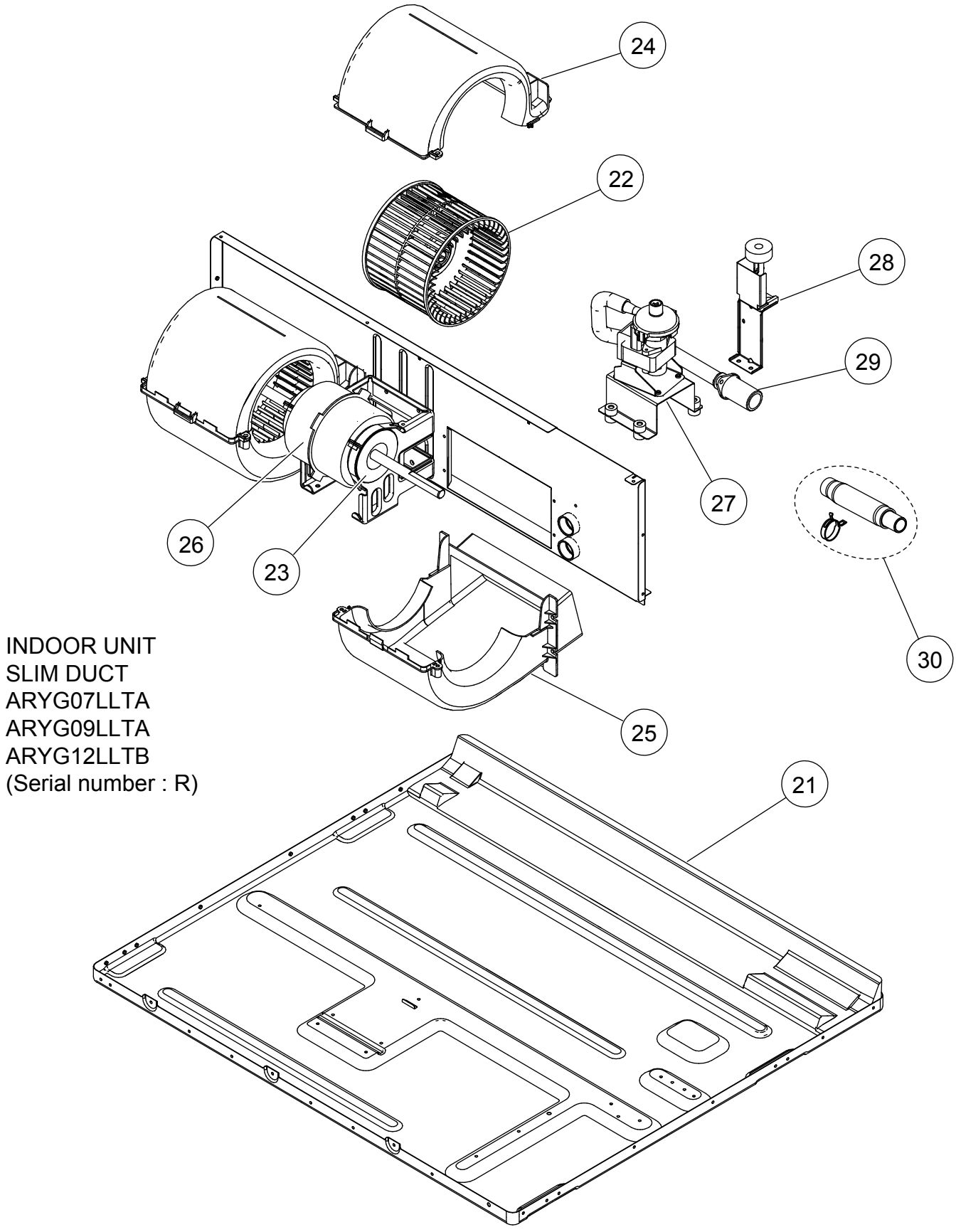

INDOOR UNIT
SLIM DUCT
ARYG07LLTA
ARYG09LLTA
ARYG12LLTB
(Serial number : R)

Ref	Description	Parts number	
21	Top Panel Sub Assy	9379908030	
22	Sirroco Fan Assy	9379570015	
23	Rubber (Vibration Proof)	9379644006	
24	Casing B	9379572002	
25	Casing U	9379571005	
26	Fan Motor Assy (07)	9603139018	

Ref	Description	Parts number	
26	Fan Motor (09, 12)	9602967025	
27	Drain Pump Sub Assy	9379914024	
28	Float Switch Sub Assy	9378593022	
29	Drain Hose Assy	9379913003	
30	Hose Sub Assy	9378450097	

INDOOR UNIT
SLIM DUCT
ARYG07LLTA
ARYG09LLTA
ARYG12LLTB
(Serial number : R)

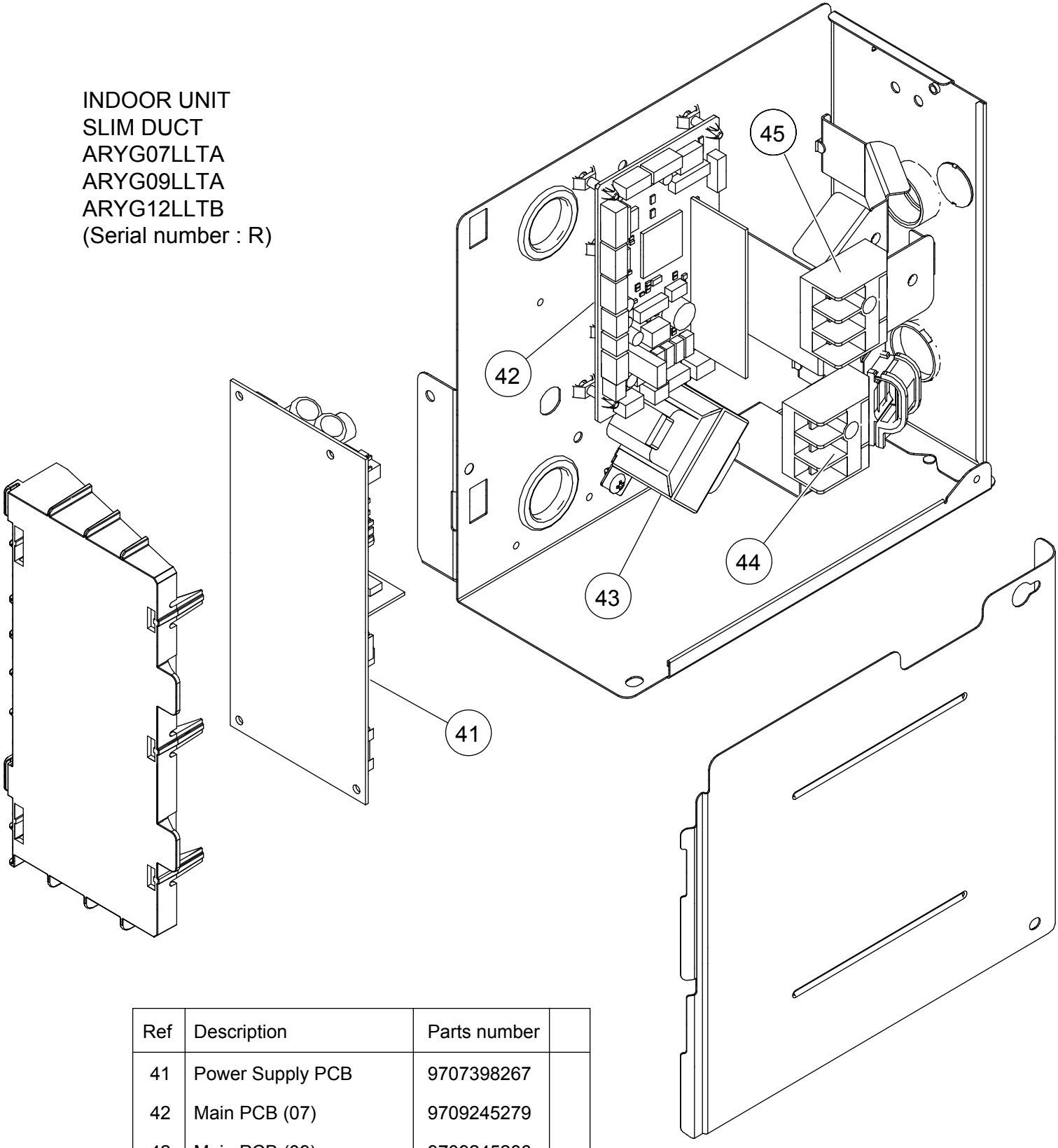

Ref	Description	Parts number	
41	Power Supply PCB	9707398267	
42	Main PCB (07)	9709245279	
42	Main PCB (09)	9709245286	
42	Main PCB (12)	9709245293	
43	Reactor Assy	9707457018	
44	Terminal 3P	9306489045	
45	Terminal 3P (Wired Remote)	9703345012	
46	Wired Remote Control	9318593013	
--	Room Thermistor	9900653002	
--	Pipe Thermistor	9900498108	

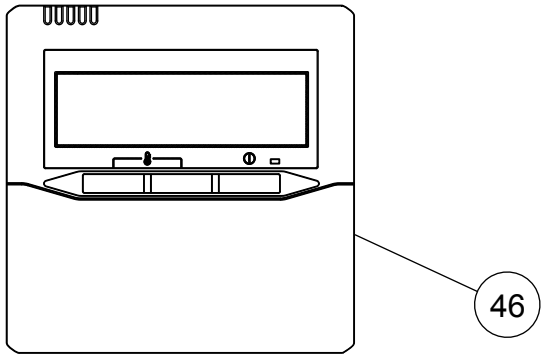

ACCESSORIES

OUTDOOR UNIT

Name and Shape	Q'ty	Use
Drain pipe assy 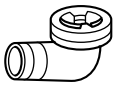	1	For outdoor unit drain piping work
Adapter assy 9.52mm → 12.7mm 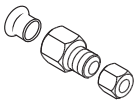	1	For use when connecting model 14 to outdoor port A or B (AOYG18LAC2 only)

INDOOR UNIT
COMPACT WALL MOUNTED
ASYG07, 09, 12LJCA

Name and Shape	Q'ty
Wall hook bracket	1
Remote control	1
Battery	2
Remote control holder	1
Cloth tape	1
Tapping screw (big)	8
Tapping screw (small)	2
Air cleaning filter	2

COMPACT WALL MOUNTED
ASYG07, 09, 12, 14LUCA

Name and Shape	Q'ty
Wall hook bracket	1
Remote control	1
Battery	2
Remote control holder	1
Cloth tape	1
Tapping screw (big)	8
Tapping screw (small)	2
Air cleaning filter	2

INDOOR UNIT
COMPACT WALL MOUNTED
ASYG07, 09, 12, 14LMCA

Name and Shape	Part number
Bracket Panel 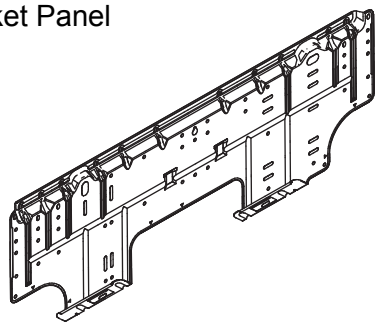	9332882018
Remote Control 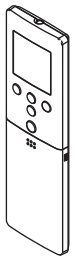	9319208008
Remote Control Holder 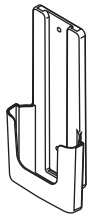	9318912005
Battery (penlight)	0600185541

Name and Shape	Part number
Cloth tape 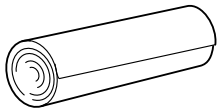	9310519004
Tapping screw (M4 x 25 mm) 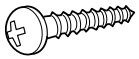	0700076046
Tapping screw (M3 x 12 mm) 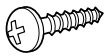	0700019036
Air cleaning filter assy 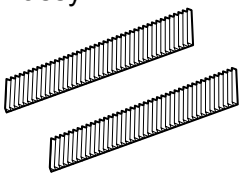	9317250009
Filter holder 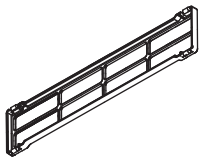	9332911008

OPTIONAL PARTS

Name and Shape	
Wired remote control UTY-RVNYM	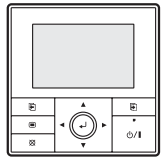
Wired remote control UTY-RNNYM	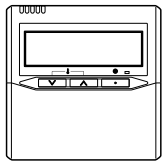
Simple remote Control UTY-RSNYM	
External connect kit UTY-XWZXZ5	
Communication kit UTY-XCBXZ2	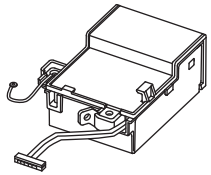

INDOOR UNIT
COMPACT CASSETTE
AUYG07, 09, 12LVLA
AUYG12LVLB

Name and Shape	Q'ty	Application
Coupler heat insulation (Large)	1	For indoor side pipe joint (Gas pipe)
Coupler heat insulation (Small)	1	For indoor side pipe joint (Liquid pipe)
Special nut A (Large ßange)	4	For installing indoor unit
Special nut B (Small ßange)	4	For installing indoor unit
Template (Carton top)	1	For cealing openings cutting Also used as packing
Drain hose	1	For installing drain pipe
Hose Band	1	For installing drain hose
Drain hose insulation	1	For installing drain pipe
Remote controller	1	For air conditioner operation
Battery	2	For remote controller unit
Remote controller holder	1	For installing the remote controller
Tapping screw (M3 × 12mm)	2	For mounting the remote controller holder
Binder	2	For electrical wiring
Wire clamper	1	For electrical wiring

DECORATION PANEL
UTG-UFYD-W

Name and Shape	Q'ty	Application
Connector cover	1	For covering connector
Tapping Screw (M5 × 12 mm)	4	For mounting decora-tion panel
Tapping Screw (M4 × 12 mm)	1	For mounting connec-tor cover
L angle	2	For mounting the Hook Wire to the Decoration panel
Hook wire	2	For suspending the Decoration panel
Screw [pitch small] (M4 × 10 mm)	2	For mounting the Hook Wire (for metals)
Screw [pitch large] (M4 × 10 mm)	4	For mounting the L angle and Hook wire (for resins)

INDOOR UNIT
FLOOR
AGYG09LVCA
AGYG12LVCA

Name and Shape	Q'ty
Wall hook bracket	1
Remote control	1
Battery	2
Remote control holder	1
Cloth tape	1
Tapping screw (M4 x 25 mm)	9
Tapping screw (M3 x 12 mm)	2
Air cleaning filter	2

INDOOR UNIT
SLIM DUCT
ARYG07LLTA
ARYG09LLTA
ARYG12LLTA
ARYG12LLTB

Name and Shape	Q'ty	Application
Installation template	1	For positioning the indoor unit
Washer	8	For installing indoor unit
Coupler heat insulation (Large)	1	For indoor side pipe joint (Large pipe)
Coupler heat insulation (Small)	1	For indoor side pipe joint (Small pipe)
Binder	Medium 3	For power supply and remote control cable binding.
	Large 4	For fixing the coupler heat insulation.
Filter (Small)	2	(ARYG07LLTA ARYG09LLTA ARYG12LLTA, B)
Drain hose	1	For installing drain pipe 3/4 in. (O.D. 1-1/16 in.)
Hose band	1	For installing drain hose
Drain hose insulation B	1	Insulates the drain hose
Wired remote control	1	
Remote control cable	1	For connecting the remote control
Tapping screw (M4 × 16 mm)	2	For installing the remote control

SPLIT TYPE
ROOM AIR CONDITIONER
Slim Duct / Compact Cassette
Compact Wall Mounted /
Floor type
INVERTER MULTI

SERVICE INSTRUCTION

Models	Indoor unit	Outdoor unit
	AR*G07LL* A AR*G09LL* A AR*G12LL* *	AO*G18LAC2
	AU*G07LVLA AU*G09LVLA AU*G12LVL*	
	AS*G07LJCA AS*G09LJCA AS*G12LJCA	
	AS*G07LUCA AS*G09LUCA AS*G12LUCA AS*G14LUCA	
	AG*G09LVCA AG*G12LVCA	
	AS*G07LMCA AS*G09LMCA AS*G12LMCA AS*G14LMCA	

Refrigerant
R410A

FUJITSU GENERAL LIMITED

CONTENTS

1. DESCRIPTION OF EACH CONTROL OPERATION

1. CAPACITY CONTROL..... 01-01
2. AUTO CHANGEOVER OPERATION..... 01-01
3. INDOOR FAN CONTROL..... 01-03
4. LOUVER CONTROL..... 01-09
5. OUTDOOR FAN CONTROL..... 01-13
6. TIMER OPERATION CONTROL..... 01-14
7. COMPRESSOR CONTROL..... 01-17
8. ELECTRONIC EXPANSION VALVE CONTROL..... 01-18
9. TEST OPERATION CONTROL..... 01-18
10. PREVENT TO RESTART FOR 3 MINUTES (3 MINUTES ST)..... 01-18
11. 4-WAY VALVE EXTENSION SELECT..... 01-19
12. AUTO RESTART..... 01-19
13. MANUAL AUTO OPERATION..... 01-19
14. COMPRESSOR PREHEATING..... 01-20
15. POWERFUL OPERATION..... 01-20
16. 10°C HEAT OPERATION..... 01-20
17. ECONOMY OPERATION..... 01-20
18. DEFROST OPERATION CONTROL..... 01-21
19. OFF DEFROST OPERATION CONTROL..... 01-23
20. VARIOUS PROTECTIONS..... 01-24

2. TROUBLE SHOOTING

2-1 ERROR DISPLAY..... 02-01

2-1-1 INDOOR UNIT DISPLAY..... 02-01

2-1-2 WIRED REMOTE CONTROLLER DISPLAY..... 02-02

2-2 TROUBLE SHOOTING WITH ERROR CODE..... 02-03

2-3 TROUBLE SHOOTING WITH NO ERROR CODE..... 02-32

2-4 SERVICE PARTS INFORMATION..... 02-37

3. REPLACEMENT PARTS

Refrigerant
R410A

Slim Duct / Compact Cassette
Compact Wall Mounted
Floor type

INVERTER (MULTI)

1 . DESCRIPTION OF EACH CONTROL OPERATION

1. CAPACITY CONTROL

1-1 COOLING, HEATING, DRY CAPACITY CONTROL

Compressor frequency decides by capacity of an indoor unit, operation number of an indoor unit, set temperature, room temperature and outside temperature.

2. AUTO CHANGEOVER OPERATION

When the air conditioner is set to the Auto mode by remote controller, operation starts in the optimum mode from among the Heating, Cooling, Dry and Monitoring mode. During operation, the optimum mode is automatically switched in accordance with temperature changes. The temperature can be set between 18°C and 30°C in 1°C steps.

① When operation starts, indoor fan and outdoor fan are operated for around 3 minutes.
Room temperature and outdoor temperature are sensed,
and the operation mode is selected in accordance with the table below. **<Monitoring mode>**

(Table 1 : Operation mode selection table)

Room temperature (TR)	Operation mode
TR> Ts + 2°C	Cooling (Autmatic dry)
Ts + 2°C ≧ TR ≧ Ts - 2°C	*Middle zone
TR < Ts - 2°C	Heating

TR : Room temperature
Ts : Setting temperature

*If it's Middle zone, operation mode of indoor unit is selected as below.

(1). Same operation mode is selected as outdoor unit.
If outdoor unit is operating in Cooling, Dry, and Heating mode, indoor unit will be operated by the same operation mode.

(2). Selected by the outdoor temperature.
If outdoor unit is operating in other than Cooling, Dry, and Heating mode, indoor unit will be operated according to the outdoor temperature as below.

(Fig. 1 : Outdoor temperature zone selection)

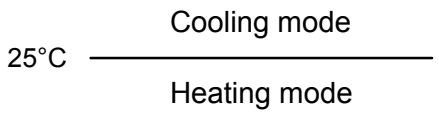

② When Cooling or Dry mode was selected at ① and air flow mode is Auto, the air conditioner operates as follow.
- The same operation as COOLING OPERATION AND DRY OPERATION.
- When the room temperature has remained at set temperature -1.5°C, operation is automatically switched to Dry mode.
- If the room temperature reaches set temperature +2°C during Dry mode, operation returns to Cooling.

(Fig.2 : Auto changeover : Cooling - Dry)

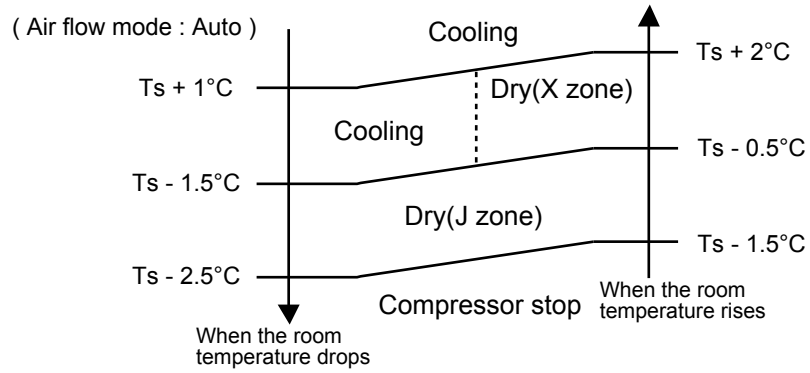

TR : Room temperature
Ts : Setting temperature

③ When Heating was selected at ①, the same operation as HEATING OPERATION of page 01-02 is performed.

④ When the compressor was stopped for 6 consecutive minutes by the temperature control function after the Cooling(Auto:Dry) or Heating mode was selected at ① above, operation is switched to Monitoring and the operation mode is selected again.

■ AUTO CHANGEOVER operation flow chart

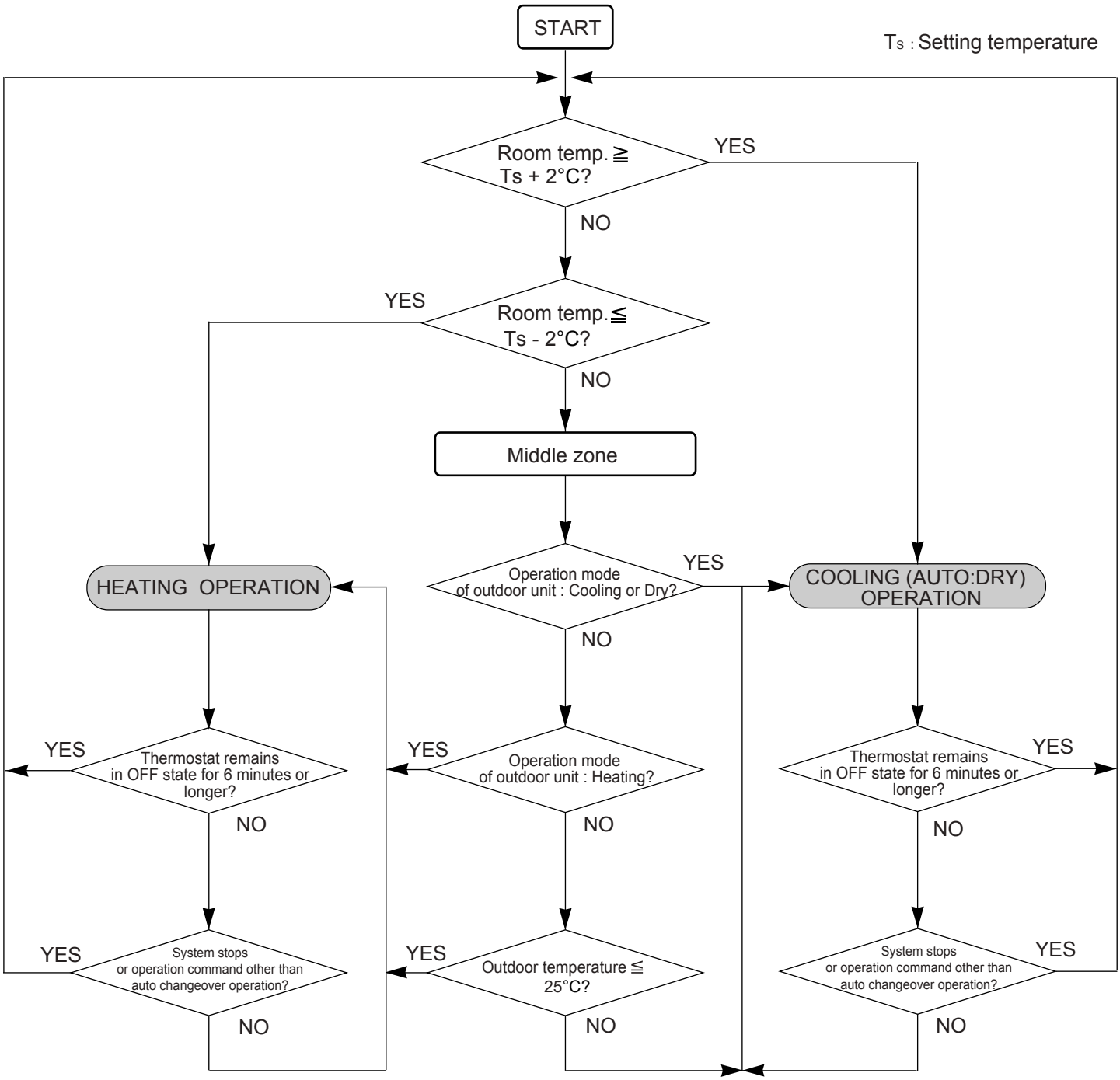

3. INDOOR FAN CONTROL

1. Fan speed

(Table 2 : Indoor fan speed table)

AS*G07LJCA (rpm)

Operation mode	Air flow mode	Fan Speed
Heating	Hi	1050
	Me+	1000
	Me	950
	Lo	850
	Quiet	710
	Cool Air Prevention	600
	S-Lo	480
Cooling / Fan	Hi	1050
	Me	950
	Lo	850
	Quiet	680
	*Soft Quiet	600
Dry	Auto	X, J zone:680

AS*G09LJCA (rpm)

Operation mode	Air flow mode	Fan Speed
Heating	Hi	1100
	Me+	1040
	Me	980
	Lo	850
	Quiet	710
	Cool Air Prevention	600
	S-Lo	480
Cooling / Fan	Hi	1100
	Me	980
	Lo	850
	Quiet	680
	*Soft Quiet	600
Dry	Auto	X, J zone:680

AS*G12LJCA (rpm)

Operation mode	Air flow mode	Fan Speed
Heating	Hi	1200
	Me+	1130
	Me	1050
	Lo	910
	Quiet	710
	Cool Air Prevention	600
	S-Lo	480
Cooling / Fan	Hi	1200
	Me	1050
	Lo	880
	Quiet	680
	*Soft Quiet	600
Dry	Auto	X, J zone:680

AU*G07LVLA (rpm)

Operation mode	Air flow mode	Fan Speed
Heating	Hi	590
	Me+	570
	Me	540
	Lo	490
	Quiet	440
	Cool Air Prevention	400
	S-Lo	300
Cooling / Fan	Hi	590
	Me	540
	Lo	490
	Quiet	440
	*Soft Quiet	400
Dry	Auto	X, J zone:440

AU*G09LVLA (rpm)

Operation mode	Air flow mode	Fan Speed
Heating	Hi	590
	Me+	570
	Me	540
	Lo	490
	Quiet	440
	Cool Air Prevention	400
	S-Lo	300
Cooling / Fan	Hi	590
	Me	540
	Lo	490
	Quiet	440
	*Soft Quiet	400
Dry	Auto	X, J zone:440

AU*G12LVL* (rpm)

Operation mode	Air flow mode	Fan Speed
Heating	Hi	650
	Me+	620
	Me	580
	Lo	520
	Quiet	460
	Cool Air Prevention	400
	S-Lo	300
Cooling / Fan	Hi	660
	Me	580
	Lo	520
	Quiet	460
	*Soft Quiet	400
Dry	Auto	X, J zone:460

*Note, during Economy operation and operation mode is Fan, air flow is 1 step downs.
(Hi > Me, Me > Lo, Quiet > Soft Quiet)

AR*G07LL*A (Static pressure:25Pa) (rpm)

Operation mode	Air flow mode	Fan Speed
Heating	Hi	1160
	Me	1000
	Lo	940
	Quiet	880
	S-Lo	500
Cooling / Fan	Hi	1160
	Me	1000
	Lo	940
	Quiet	880
	*Soft Quiet	500
Dry	Auto	X, J zone:880

AR*G09LL*A (Static pressure:25Pa) (rpm)

Operation mode	Air flow mode	Fan Speed
Heating	Hi	1260
	Me	1160
	Lo	1060
	Quiet	960
	S-Lo	500
Cooling / Fan	Hi	1260
	Me	1160
	Lo	1060
	Quiet	960
	*Soft Quiet	500
Dry	Auto	X, J zone:960

AR*G12LL** (Static pressure:25Pa) (rpm)

Operation mode	Air flow mode	Fan Speed
Heating	Hi	1340
	Me	1240
	Lo	1140
	Quiet	1030
	S-Lo	500
Cooling / Fan	Hi	1340
	Me	1240
	Lo	1140
	Quiet	1030
	*Soft Quiet	500
Dry	Auto	X, J zone:1030

AS*G07LUCA (rpm)

Operation mode	Air flow mode	Fan Speed
Heating	Powerful	1030
	Hi	980
	Me+	980
	Me	910
	Lo	850
	Quiet	650
	Cool Air Prevention	610
	S-Lo	570
Cooling / Fan	Powerful	1030
	Hi	980
	Me	910
	Lo	850
	Quiet	650
	*Soft Quiet	610
Dry	Auto	X, J zone:650

AS*G09LUCA (rpm)

Operation mode	Air flow mode	Fan Speed
Heating	Powerful	1080
	Hi	1030
	Me+	1030
	Me	950
	Lo	850
	Quiet	650
	Cool Air Prevention	610
	S-Lo	570
Cooling / Fan	Powerful	1080
	Hi	1030
	Me	950
	Lo	850
	Quiet	650
	*Soft Quiet	610
Dry	Auto	X, J zone:650

*Note, during Economy operation and operation mode is Fan, air flow is 1 step downs.
(Hi > Me, Me > Lo, Quiet > Soft Quiet)

AS*G12LUCA (rpm)

Operation mode	Air flow mode	Fan Speed
Heating	Powerful	1160
	Hi	1110
	Me+	1110
	Me	1030
	Lo	930
	Quiet	650
	Cool Air Prevention	610
	S-Lo	570
Cooling / Fan	Powerful	1160
	Hi	1110
	Me	1030
	Lo	930
	Quiet	650
	*Soft Quiet	610
Dry	Auto	X, J zone:650

AS*G14LUCA (rpm)

Operation mode	Air flow mode	Fan Speed
Heating	Powerful	1230
	Hi	1180
	Me+	1180
	Me	1080
	Lo	1010
	Quiet	790
	Cool Air Prevention	610
	S-Lo	570
Cooling / Fan	Powerful	1230
	Hi	1180
	Me	1080
	Lo	980
	Quiet	740
	*Soft Quiet	710
Dry	Auto	X, J zone:740

AG*G09LVCA (rpm)

Operation mode	Air flow mode		Fan Speed	
			Upper & Lower air flow mode	Upper air flow mode
Heating	Hi	Upper / Lower	1120/950	1230
	Me	Upper / Lower	1000/850	1090
	Lo	Upper / Lower	860/730	940
	Quiet	Upper / Lower	660/560	750
	Cool Air Prevention	Upper / Lower	660/560	680
	S-Lo	Upper / Lower	660/560	680
Cooling / Fan	Hi	Upper / Lower	1120/950	1230
	Me	Upper / Lower	960/820	1070
	Lo	Upper / Lower	820/700	910
	Quiet	Upper / Lower	660/560	750
	Soft Quiet	Upper / Lower	570/480	680
Dry	Auto	Upper / Lower	-	X, J zone:750

AG*G12LVCA (rpm)

Operation mode	Air flow mode		Fan Speed	
			Upper & Lower air flow mode	Upper air flow mode
Heating	Hi	Upper / Lower	1240/1040	1300
	Me	Upper / Lower	1080/920	1140
	Lo	Upper / Lower	910/770	980
	Quiet	Upper / Lower	660/560	750
	Cool Air Prevention	Upper / Lower	660/560	680
	S-Lo	Upper / Lower	660/560	680
Cooling / Fan	Hi	Upper / Lower	1240/1040	1300
	Me	Upper / Lower	1050/890	1120
	Lo	Upper / Lower	860/730	930
	Quiet	Upper / Lower	660/560	750
	Soft Quiet	Upper / Lower	570/480	680
Dry	Auto	Upper / Lower	-	X, J zone:750

AS*G07LMCA (rpm)

Operation mode	Air flow mode	Fan Speed
Heating	Powerful	1090
	Hi	1050
	Me+	1000
	Me	950
	Lo	850
	Quiet	710
	Cool Air Prevention	600
	S-Lo	480
Cooling / Fan	Powerful	1090
	Hi	1050
	Me	950
	Lo	850
	Quiet	680
	*Soft Quiet	600
Dry	Auto	X, J zone:680

AS*G09LMCA (rpm)

Operation mode	Air flow mode	Fan Speed
Heating	Powerful	1140
	Hi	1090
	Me+	1040
	Me	980
	Lo	850
	Quiet	710
	Cool Air Prevention	600
	S-Lo	480
Cooling / Fan	Powerful	1140
	Hi	1090
	Me	980
	Lo	850
	Quiet	680
	*Soft Quiet	600
Dry	Auto	X, J zone:680

AS*G12LMCA (rpm)

Operation mode	Air flow mode	Fan Speed
Heating	Powerful	1240
	Hi	1190
	Me+	1120
	Me	1050
	Lo	910
	Quiet	710
	Cool Air Prevention	600
	S-Lo	480
Cooling / Fan	Powerful	1240
	Hi	1190
	Me	1050
	Lo	880
	Quiet	680
	*Soft Quiet	600
Dry	Auto	X, J zone:680

AS*G14LMCA (rpm)

Operation mode	Air flow mode	Fan Speed
Heating	Powerful	1240
	Hi	1190
	Me+	1120
	Me	1050
	Lo	910
	Quiet	710
	Cool Air Prevention	600
	S-Lo	480
Cooling / Fan	Powerful	1240
	Hi	1190
	Me	1050
	Lo	880
	Quiet	680
	*Soft Quiet	600
Dry	Auto	X, J zone:680

*Note, during Economy operation and operation mode is Fan, air flow is 1 step downs.
(Hi > Me, Me > Lo, Quiet > Soft Quiet)

2. FAN OPERATION

The airflow can be switched in 5 steps such as Auto, Quiet, Lo, Me, Hi, while the indoor fan only runs.
When Fan mode is set at (Auto), it operates on (Me) Fan Speed. < All models >

3. COOLING OPERATION (Auto : Cooling)

Switch the airflow [Auto], and the indoor fan motor will run according to a room temperature, as shown in Fig 3.
On the other hand, if switched in [Hi] ～[Quiet], the indoor motor will run at a constant airflow of [Cooling] operation modes Quiet, Lo, Me, Hi.

(Fig.3 : Airflow change - over (Cooling : Auto))

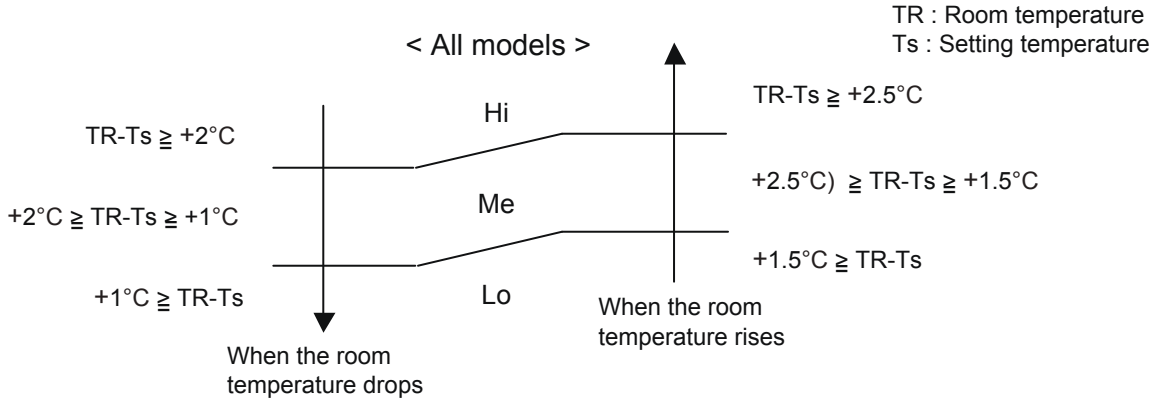

3-1 INDOOR UNIT FAN CONTROL FOR ENERGY SAVING (Cooling mode)

Switch the airflow at cooling mode, and the indoor fan motor will run as shown in Fig.4.
It depends on the Function setting "Indoor unit fan control for energy saving."

4. DRY OPERATION (Auto : Dry)

During the dry operation, the fan speed setting can not be changed,it operates automatically as shown in Fig. 4.
Room temperature variation which the room temperature sensor of the indoor unit body has detected.

(Fig. 4 : Indoor fan control)

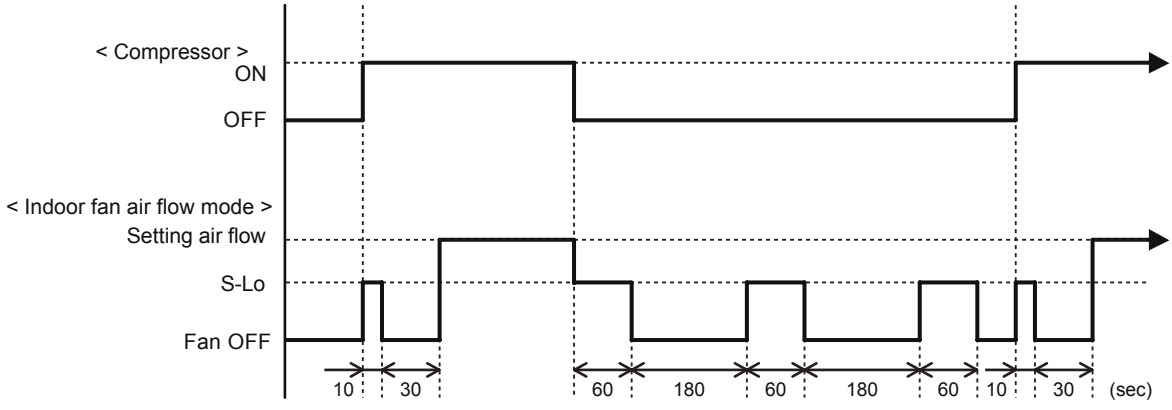

5. HEATING OPERATION (Auto : Heating)

Switch the airflow [Auto], and the indoor fan motor will run according to a room temperature, as shown in Fig 5.
On the other hand, if switched in [Hi] ～ [Quiet], the indoor motor will run at a constant airflow of [Heat] operation modes Quiet, Lo, Me, Hi, as shown in Table 2.

(Fig.5 : Airflow change - over (Heating : Auto))

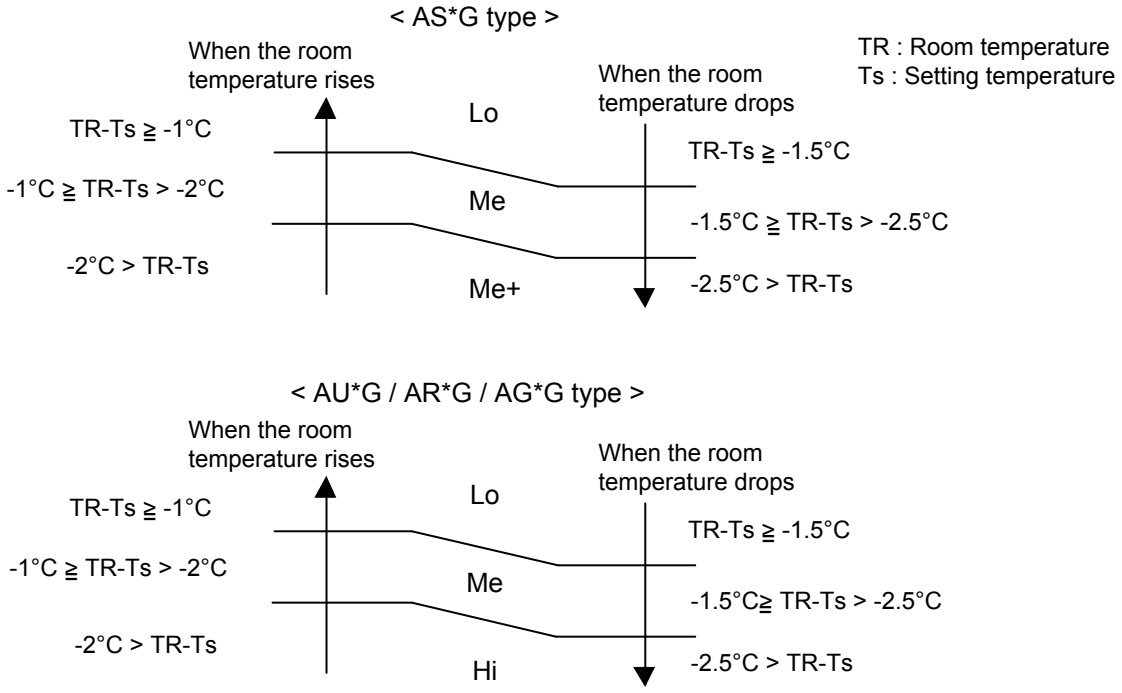

6. COOL AIR PREVENTION CONTROL (For Heating and Min. Heat operation)

The maximum value of the indoor fan speed is set as shown in Fig 6, based on the detected temperature by the indoor heat exchanger sensor in heating mode.
Field setting is necessary at AR and AU type as "Cool air prevention : effective"

(Fig.6 : Airflow change - over for cool air prevention)

During NORMAL HEATING OPERATION

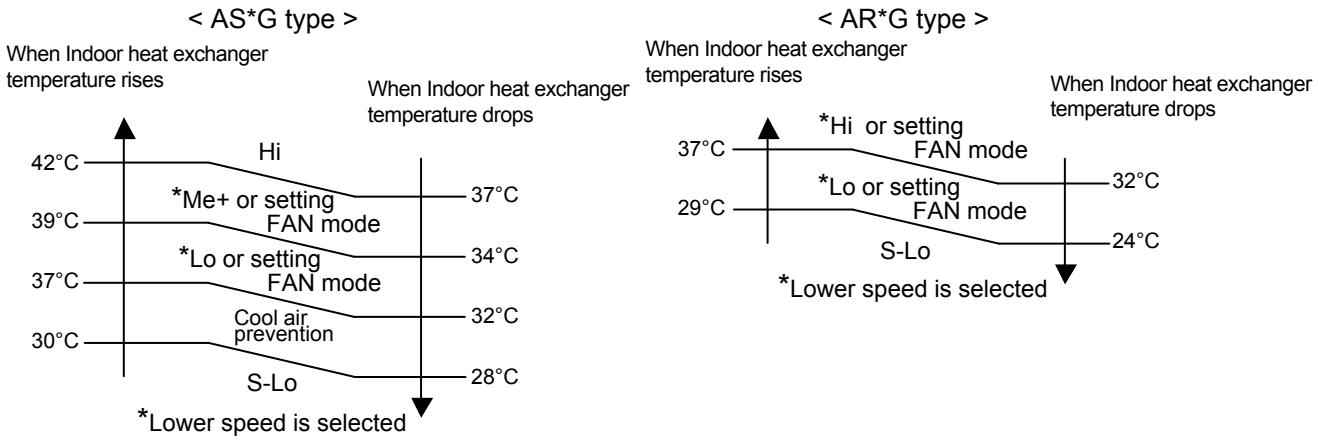

< AU*G type >

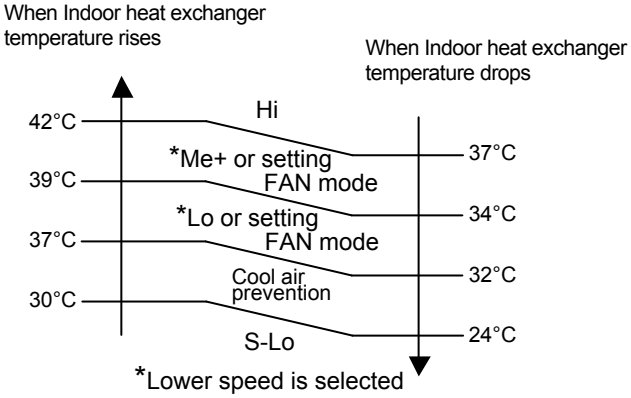

< AG*G type >

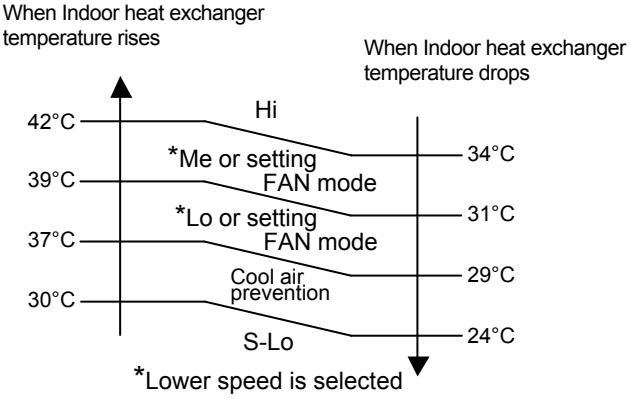

During MIN. HEAT OPERATION

< AS*G / AU*G type >

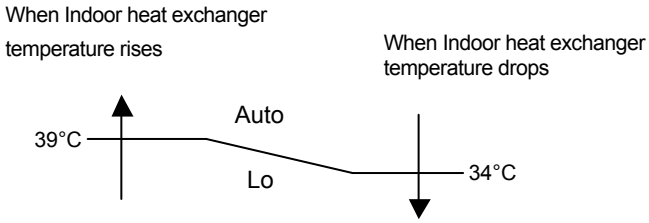

< AR*G type >

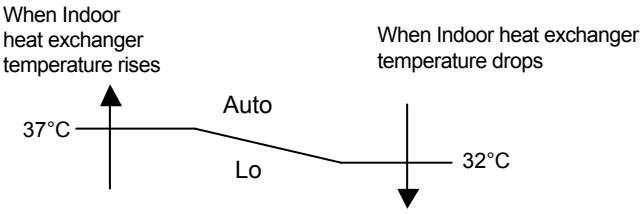

< AG*G type >

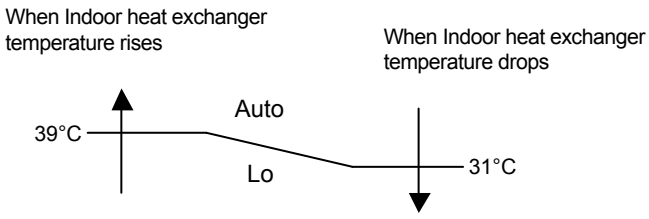

4. LOUVER CONTROL

For AS*G07/ 09/ 12LJCA Type

1. VERTICAL LOUVER CONTROL

(Function Range)

Each time the button is pressed, the air direction range will change as follow:

Cooling / Heating / Dry mode / Fan mode

① ⇄ ② ⇄ ③ ⇄ ④ ⇄ ⑤ ⇄ ⑥

(Fig.7 : Virtical Air Direction Range)

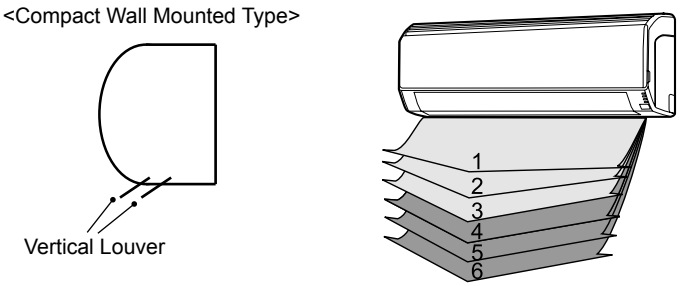

Use the air direction adjustments within the ranges shown above.

- The vertical airflow direction is set automatically as shown, in accordance with the type of operation selected.

  Cooling / Dry mode : Horizontal flow ①
  Heating mode : Downward flow ⑥

- When the temperature of the air being blown out is low at the start of heating operation or during defrosting, the airflow direction temporarily becomes ① to prevent cold air being blown onto the body.
- During use of the Cooling and Dry modes, do not set the Air Flow Direction Louver in the Heating range (④～⑥) for long period of time, since water vapor many condense near the outlet louvers and drop of water may drip from the air conditioner. During the Cooling and Dry modes, if the Air Flow Direction Louvers are left in the heating range for around 30 minutes, they will automatically return to position ③.

2. SWING OPERATION

Vertical Airflow Swing Operation

When the swing signal is received from the remote controller, the vertical louver starts to swing.

(Swinging Range)

Cooling / Dry / Fan mode(①⇔③) : ① ⇔ ④
Heating / Fan mode(④⇔⑥) ④ ⇔ ⑥

- When the indoor fan is S-Lo or Stop mode, the swing operation is interrupted and it stops at either upper end or bottom end.

For AS*G07/ 09/ 12/ 14LUCA Type

1. VERTICAL LOUVER CONTROL

(Function Range)

Each time the button is pressed, the air direction range will change as follow:

①⇄②⇄③⇄④⇄⑤⇄⑥⇄⑦

(Fig.8 : Air Direction Range)

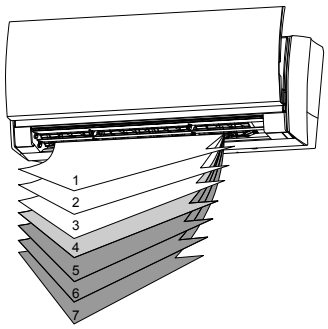

Types of Air flow Direction Setting:

①,②,③ : During Cooling/Dry modes
④,⑤,⑥,⑦ : During Heating

The Remote Controller's display does not change.

- Use the air direction adjustments within the ranges shown above.
- The vertical airflow direction is set automatically as shown, in accordance with the type of operation selected.

  Cooling / Dry mode : Horizontal flow ①
  Heating mode : Downward flow ⑥

- During AUTO mode operation, for the first a few minutes after beginning operation, air-flow will be horizontal 1; the air direction cannot be adjusted during this period. The air flow direction setting will temporarily become 1 when the temperature of the air -flow is low at the start of the Heating mode.

2. ADJUST THE RIGHT-LEFT LOUVERS

- Move the Right-Left louvers to adjust air flow in the direction you prefer.

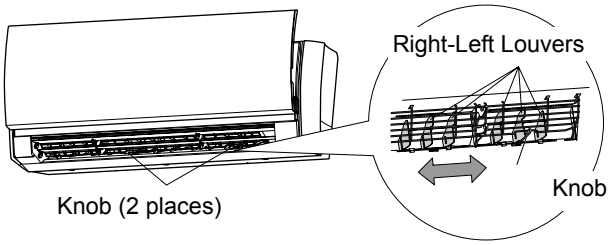

3. SWING OPERATION

To select Vertical Airflow Swing Operation

When the swing signal is received from the remote controller, the vertical louver starts to swing.

	Range
Cooling / Dry mode Fan mode (①～④)	① ⇔ ④
Heating mode Fan mode (④～⑦)	④ ⇔ ⑦

- The SWING operation may stop temporarily when the air conditioner's fan is not operating, or when operating at very low speeds.

To select Horizontal Airflow Swing Operation

(No function)

For Wall Mounted Type < AS*G07/09/12/14LMCA >

1. VERTICAL LOUVER CONTROL

(Function Range)

Each time the button is pressed, the air direction range will change as follow:

①⇄②⇄③⇄④⇄⑤⇄⑥⇄⑦

The Remote Controller's display does not change.

Fig.9 : Air Direction Range

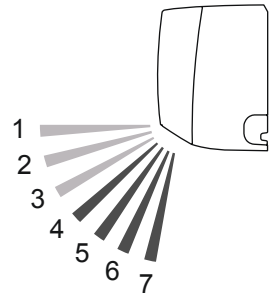

- If you set the angle to position 4.7 for more than 30 minutes in COOL or DRY mode, they automatically return to position 3.
  In COOL or DRY mode, if the angle is set to position 4.7 for many hours, condensation may be formed, and the drips may wet your property.
- Use the air direction adjustments within the ranges shown above.
- The vertical airflow direction is set automatically as shown, in accordance with the type of operation selected.

  Cooling / Dry mode : Horizontal flow ①
  Heating mode : Downward flow ⑦

- During AUTO or Heating mode operation, for the first a few minutes after beginning operation, air-flow will be horizontal 1; the air direction cannot be adjusted during this period.
  The air flow direction setting will temporarily become 1 when the temperature of the air -flow is low at the start of the Heating mode.

2. ADJUST THE RIGHT-LEFT LOUVERS

- Move the Right-Left louvers to adjust air flow in the direction you prefer.

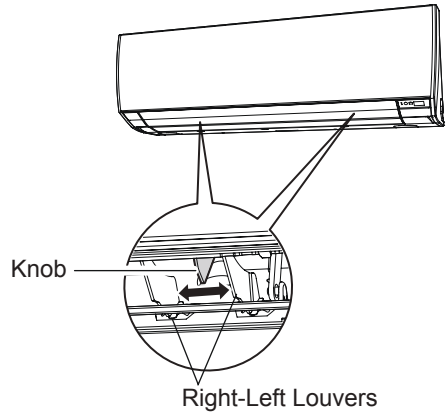

2. SWING OPERATION

To select Vertical Airflow Swing Operation

When the swing signal is received from the remote controller, the vertical louver starts to swing.

(Table11 : Swinging Range)

	Range
Cooling / Dry mode Fan mode (①～③)	① ⇔ ③
Heating mode Fan mode (④～⑦)	④ ⇔ ⑦

- The SWING operation may stop temporarily when the air conditioner's fan is not operating, or when operating at very low speeds.

To select Horizontal Airflow Swing Operation

(No function)

For AU*G07/ 09/ 12LVLA Type

1. VERTICAL LOUVER CONTROL

(Function Range)

Each time the button is pressed, the air direction range will change as follows:

①⇄②⇄③⇄④

(Fig.9 : Air Direction Range)

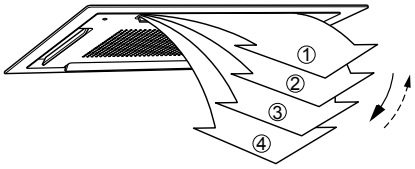

(Operation Range)

Cooling / Heating / Dry / Fan mode : ①－②－③－④

Use the air direction adjustments within the ranges shown above.

・The vertical airflow direction is set automatically as shown, in accordance with the type of operation selected.

Cooling / Dry / Fan mode : Horizontal flow ①
Heating mode : Downward flow ④

・During AUTO mode operation, for the first minute after start-up, air-flow will be horizontal ①; the air direction cannot be adjusted during this period.

2. SWING OPERATION

When the swing signal is received from the remote controller, the vertical louver starts to swing. The range of swing depends on the set airflow direction.

(Swinging Range)

Cooling / Heating / Dry / Fan mode : ① ⇔ ④

・When the indoor fan is either at S-Lo or Stop mode, the swinging operation is interrupted and it stops at either upper end or bottom end.
(Stop mode means Operation stop.)

For AG*G09/ 12LVCA Type

1. VERTICAL LOUVER CONTROL

(Function and Operation Range)

Each time the button is pressed,
the air direction range will change as follows:

(Fig.10 : Air Direction Range)

① ⇄ ② ⇄ ③ ⇄ ④ ⇄ ⑤

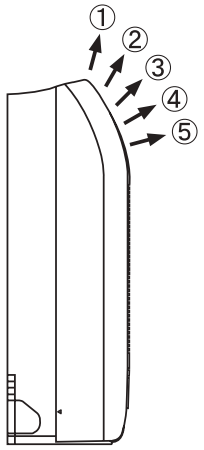

Use the air direction adjustments within the ranges shown above.

・The vertical airflow direction is set automatically as shown, in accordance with the type of operation selected.

Cooling / Dry / Fan mode : Horizontal flow ①
Heating mode : Downward flow ④

・When the temperature of the air being blown out is low at the start of heating operation or during defrosting, the airflow direction temporarily becomes ① to prevent cold air being blown onto the body.

・During Monitor operation in AUTO CHANGEOVER mode, the airflow direction automatically becomes ① , and it cannot be adjusted.

2. SWING OPERATION

When the swing signal is received from the remote controller, the vertical louver starts to swing .

(Swinging Range)

Cooling / Heating / Dry / Fan mode : ① ⇔ ⑤

・When the indoor fan is either at S-Lo or Stop mode, the swinging operation is interrrupted and it stops at either upper end or bottom end.

5. OUTDOOR FAN CONTROL

1. Outdoor Fan Motor

Following table 3 shows the fan speed of the outdoor unit.

(Table 3 : Fan speed of the outdoor unit)

	Cooling	Heating
AO*G18LAC2	900/ 820/ 700/ 410/ 320/ 250/ 200 rpm	900/ 820/ 700/ 410/ 320/ 250/ 200 rpm

* It runs at 500rpm for 20 seconds after starting up the outdoor fan.

6. TIMER OPEARTION CONTROL

6-1 WIRELESS REMOTE CONTROLLER

The table 4 shows the available timer setting based on the product model.

(Table 4 : Timer setting)

ON TIMER / OFF TIMER	PROGRAM TIMER	SLEEP TIMER	*WEEKLY TIMER
○	○	○	○

* For AS*G07/ 09/ 12/ 14LUCA Type

1. ON / OFF TIMER

・OFF timer : When the clock reaches the set time, the air conditioner will be turned off.

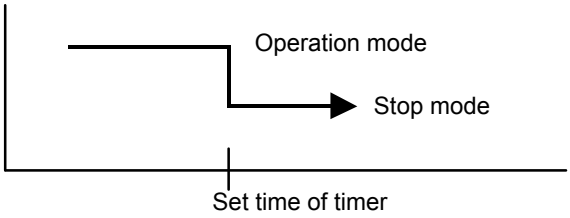

・ON timer : When the clock reaches the set time, the air conditioner will be turned on.

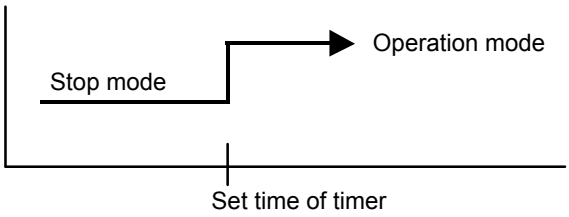

2. PROGRAM TIMER

・The program timer allows the OFF timer and ON timer to be used in combination one time.

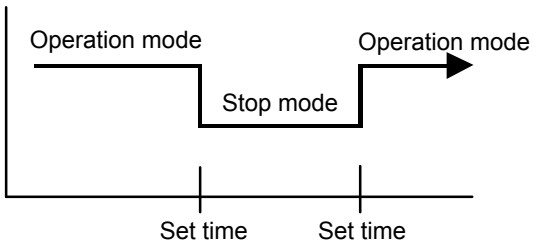

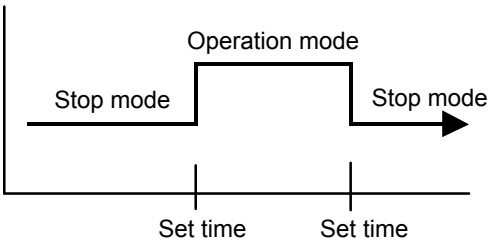

・Operation will start from the timer setting (either OFF timer or ON timer) whichever is closest to the clock's current timer setting.
The order of operations is indicated by the arrow in the remote control unit's display.

・SLEEP timer operation cannot be combined with ON timer operation.

3. SLEEP TIMER

If the sleep is set, the room temperature is monitored and the operation is stopped automatically. If the operation mode or the set temperature is change after the sleep timer is set, the operation is continued according to the changed setting of the sleep timer from that time ON.

In the cooling operation mode

When the sleep timer is set, the setting temperature is increased 1°C.
It increases the setting temperature another 1°C after 1 hour.
After that, the setting temperature is not changed and the operation is stopped at the time of timer setting.

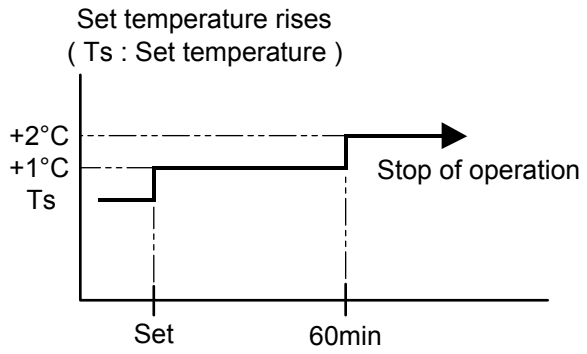

In the heating operation mode

When the sleep timer is set, the setting temperature is decreased 1°C.
It decreases the setting temperature another 1°C every 30 minutes.
Upon lowering 4deg C, the setting temperature is not changed and the operation stops at the time of timer setting.

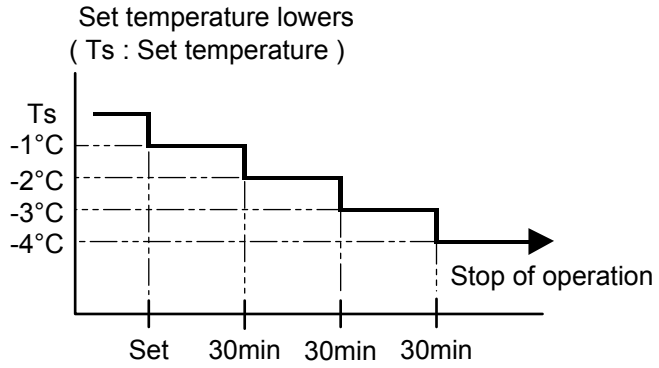

4. WEEKLY TIMER (For AS*G07/ 09/ 12/ 14LUCA Type)

This timer function can set operation times of the each day of the week.
All days can be set together,the weekly timer can be used to repeat the timer setting for all of the days.

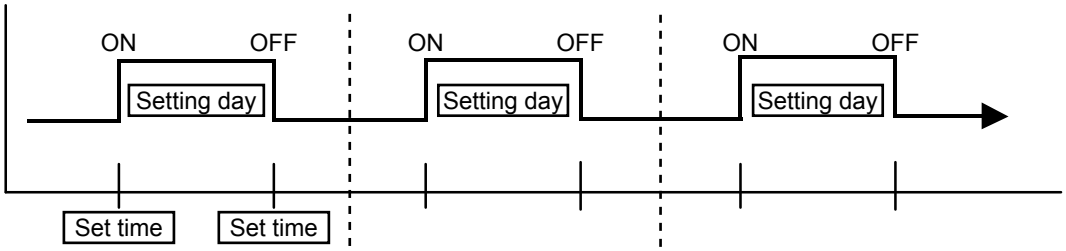

6-2 WIRED REMOTE CONTROLLER

The Table 5 shows the available timer setting based on the product model.

(Table 5 : Timer setting)

ON TIMER / OFF TIMER	WEEKLY TIMER	TEMPERATURE SET BACK TIMER
○	○	○

1. ON TIMER / OFF TIMER

Same to 6-1 **ON / OFF TIMER** and shown in those.

2. WEEKLY TIMER

This timer function can set operation times of the each day of the week.
All days can be set together,the weekly timer can be used to repeat the timer setting for all of the days.

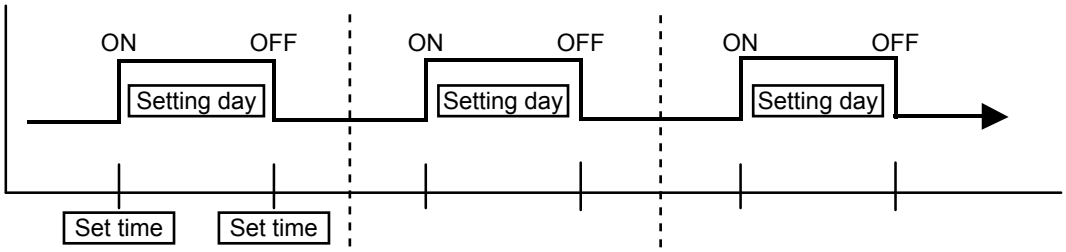

3. TEMPERATURE SET BACK TIMER

This timer function can change setting temperature of setting operation times of the each day of the week.
This can be together with other timer setting.

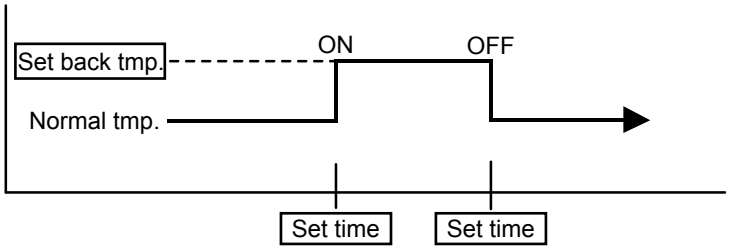

7. COMPRESSOR CONTROL

1. OPERATION FREQUENCY RANGE

The operation frequency of the compressor is different based on the operation mode as shown in the table 6.

(Table 6 : Compressor Operation Frequency Range)

	Cooling		Heating	
	Min	Max	Min	Max
AO*G18LAC2	15rps	85rps	21rps	130rps

2. OPERATION FREQUENCY CONTROL AT START UP

The compressor frequency soon after the start-up is controlled as shown in the figure 9.

(Fig.11 : Compressor Control at Start-up)

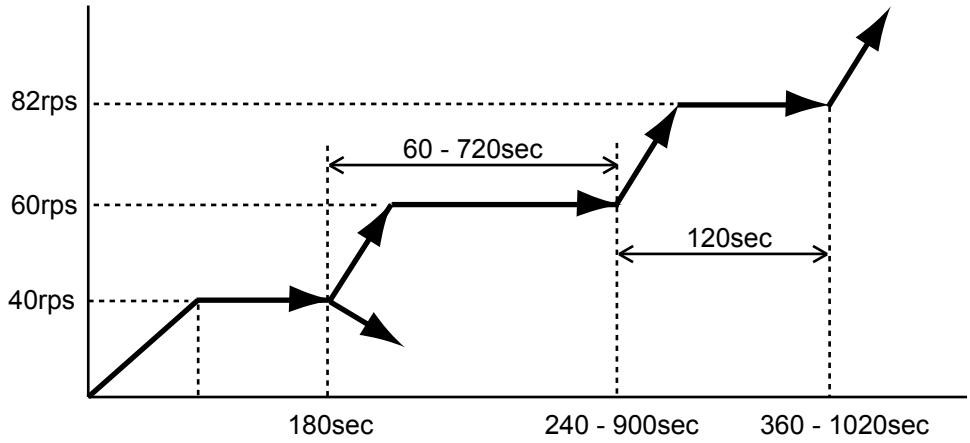

8. ELECTRONIC EXPANSION VALVE CONTROL

The most proper opening of the electronic expansion valve is calculated and controlled under the present operating condition based on the Table7.
The compressor frequency, the temperatures detected by the discharge temperature sensor and the outdoor temperature sensor.

(Table7 : The pulse range of the electronic expansion valve control)

	Operation mode	Pulse range
AO*G18LAC2	Cooling /Dry mode	50 ~ 480
	Heating mode	30 ~ 480

* At the time of supplying the power to the outdoor unit, the initialization of the electronic expansion valve is operated (1000 pulses are input to the closing direction).

9. TEST OPERATION CONTROL

[Operation method (For Wireless Remote Controller (with TEST RUN button) Type)]

Under the condition where the air conditioner runs, press the TEST RUN button, and the test operation control mode will appear.
During test running, the operation lamp and timer lamp of the air conditioner body twinkle simultaneously.
Set the test operation mode, and the compressor will continue to run regardless of whether the room temperature sensor detects.

[Release]

The test operation mode is released if 60 minutes have passed after setting up the test operation.

[Operation method (For AS*G07/ 09/ 12/ 14LUCA Type)]

The outdoor unit, may not operate, depending on the room temperature.
In this case, keep on pressing the MANUAL AUTO button of the indoor unit for more than 10 seconds.
The Operation lamp and Timer lamp will begin to flash simultaneously during cooling test run.
Then, heating test run will begin in about 3 minutes when HEAT is selected by the remote control operation.
(When the air conditioner is running by pressing the test run button, the Operation lamp and Timer lamp will simultaneously flash slowly.)

[Release]

Perform the test operation for 60 minutes.
Pressing the MANUAL AUTO button of the indoor unit for more than 3 seconds.

[Using the Wired remote control (Option)]

If the Operation lamp is on, press the START/STOP button to turn it off.
Press the MODE and the FAN buttons at the same time for more than two seconds to start the test operation.
The operation lamp will light up and "o1" will be displayed on the set temperature display.

[Release]

Perform the test operation for 60 minutes.
Pressing the START/STOP button will stop the test operation.

10. PREVENT TO RESTART FOR 3 MINUTES (3 MINUTES ST)

The compressor won't enter operation status for 3 minutes after the compressor is stopped, even if any operation is given.

11. 4-WAY VALVE EXTENSION SELECT

At the time when the air conditioner is switched from the Cooling mode to Heating mode, the compressor is stopped, and the 4-way valve is switched in 3 minutes later after the compressor stopped.

12. AUTO RESTART

When the power was interrupted by a power failure, etc. during operation, the operation contents at that time are memorized and when power is recovered, operation is automatically resumed with the memorized operation contents.

(Table 8 : Operation contents memorized when the power is interrupted)

	Wireless remote controller	Wired remote controller (When Memory Backup : Disable)	Wired remote controller (When Memory Backup : Enable)	
Operation mode	○	○	○	
Set temperature	○	○	○	
Set air flow	○	○	○	
Thermistor detected position	—	×	○	
Timer mode	○	×	OFF Timer	×
			ON Timer	×
			WEEKLY Timer	○
			TEMPERATURE SET BACK Timer	○

○ : Memorize
× : Not memorize

*It is necessary to set on the DIP-SW1-No,6 of the wired remote controller, to enable the memory backup.
Refer to the installation manual of wired remote controller for details.

13. MANUAL AUTO OPERATION

If MANUAL / AUTO Button is pushed continuous from 3 seconds to 10 seconds, manual auto operation will starts.
If the remote control is lost or battery power dissipated, this function will work without the remote control.

(Table 9 : Manual auto operation control)

Functions	All models
OPERATION MODE	Auto changeover
SETTING TEMP.	24°C
FAN MODE	Auto
VERTICAL LOUVER	NORMAL
HORIZONTAL LOUVER	NORMAL
TIMER MODE	Continuous (No timer setting available)
SWING OPERATION	OFF
ECONOMY	OFF

14. COMPRESSOR PREHEATING

When the outdoor heat exchanger temperature is lower than Operation temperature (Refer to Table 10) and the heating operation has been stopped for 3 hours, power is applied to the compressor and the compressor is heated.
(By heating the compressor, warm air is quickly discharged when operation is started.)
When operation was started, and when the outdoor temperature rises to Release temperature or greater, preheating is over.

(Table 10 : Preheating Operation / Release Temperature)

Before 24 hour		After 24 hour	
Operation temperature	Release temperature	Operation temperature	Release temperature
3°C	7°C	0°C	4°C

15. POWERFUL OPERATION

The POWERFUL OPERATION functions by pressing POWERFUL button on the remote controller.
The indoor unit & outdoor unit will operate at maximum power as shown in Table11.

(Table11)

	Powerful operation
COMPRESSOR FREQUENCY	Maximum
FAN CONT. MODE	Powerful
SETTING LOUVER	Cooling/ Dry : 3, Heating : 5

Release Condition is as follows.
[Cooling / Dry]
- Room tenperature ≦ Setting temperature - 1.5°C or Operation time has passed 20 minutes.

[Heating]
- Room tenperature ≧ Setting temperature +1.5°C or Operation time has passed 20 minutes.

16. 10°C HEAT OPERATION

10°C HEAT operation performs as below when pressing 10°C HEAT button or
Weekly timer setting on the remote controller.

(Table 12 : 10°C HEAT operation)

Mode	Heating
Setting temperature	10°C
Fan mode	Auto
LED display	Economy
Defrost operation	Operate as normal

17. ECONOMY OPERATION

The ECONOMY operation functions by pressing ECONOMY button on the remote controller.
At the maximum output, ECONOMY Operation is approximately 70% of normal air conditioner operation for cooling and heating.
The ECONOMY operation is almost the same operation as below settings.

(Table 13)

Mode	Cooling/ Dry	Heating
Target temperature	Setting temp.+1°C	Setting temp.-1°C

18. DEFROST OPERATION CONTROL

1. CONDITION OF STARTING THE DEFROST OPERATION

The defrost operation starts when the outdoor heat exchanger temperature sensor detects the temperature lower than the values shown in Table 14-1, 14 -2.

1-1 NORMAL DEFROST

(Table 14-1 : Condition of starting defrost operation)

Normal defrost	Compressor integrating operation :Less than 45min.	Compressor integrating operation :45min and over	
		Less than 6 min. *1 or 10min. *2	After 6 min. *1 or 10min. *2
	Does not operate		-8°C *3 -12°C *4 -14°C *5 -16°C *6 -18°C *7

*1. It means contiguous operation time.
*2. Compressor stop time:
Below 20min. → Select 6min.
Above 20min. → Select 10min.
*3. Outdoor temp. > 3°C
*4. Outdoor temp. > -1°C
*5. Outdoor temp. > -5°C
*6. Outdoor temp. > -10°C
*7. Outdoor temp. ≦ -10°C

1-2. INTEGRATING DEFROST

(Table 14-2 : Condition of starting defrost operation)

Integrating defrost	Compressor integrating operation time	
	More than 210 minutes (For continuous operation)	Less than 10 minutes ✱ (For intermittent operation)
	When the compressor is stopped, If detected outside air temp. at 2°C	OFF count of the compressor 40 times (at outside air temp. < 2°C)

✱If the compressor continuous operation time is less than 10 minutes, the OFF number of the compressor is counted.
If any defrost operated, the compressor OFF count is cleared.

2. CONDITION OF THE DEFROST OPERATION COMPLETION

Defrost operation is released when the conditions become as shown in Table 15.

(Table 15 : Defrost release condition)

Release Condition
Outdoor heat exchanger temperature sensor value is higher than 16°C or Compressor operation time has passed 15 minutes.

3. Defrost Flow Chart

The defrosting shall proceed by the integrating operation time, outdoor temperature and outdoor heat exchanger temperature as follows.

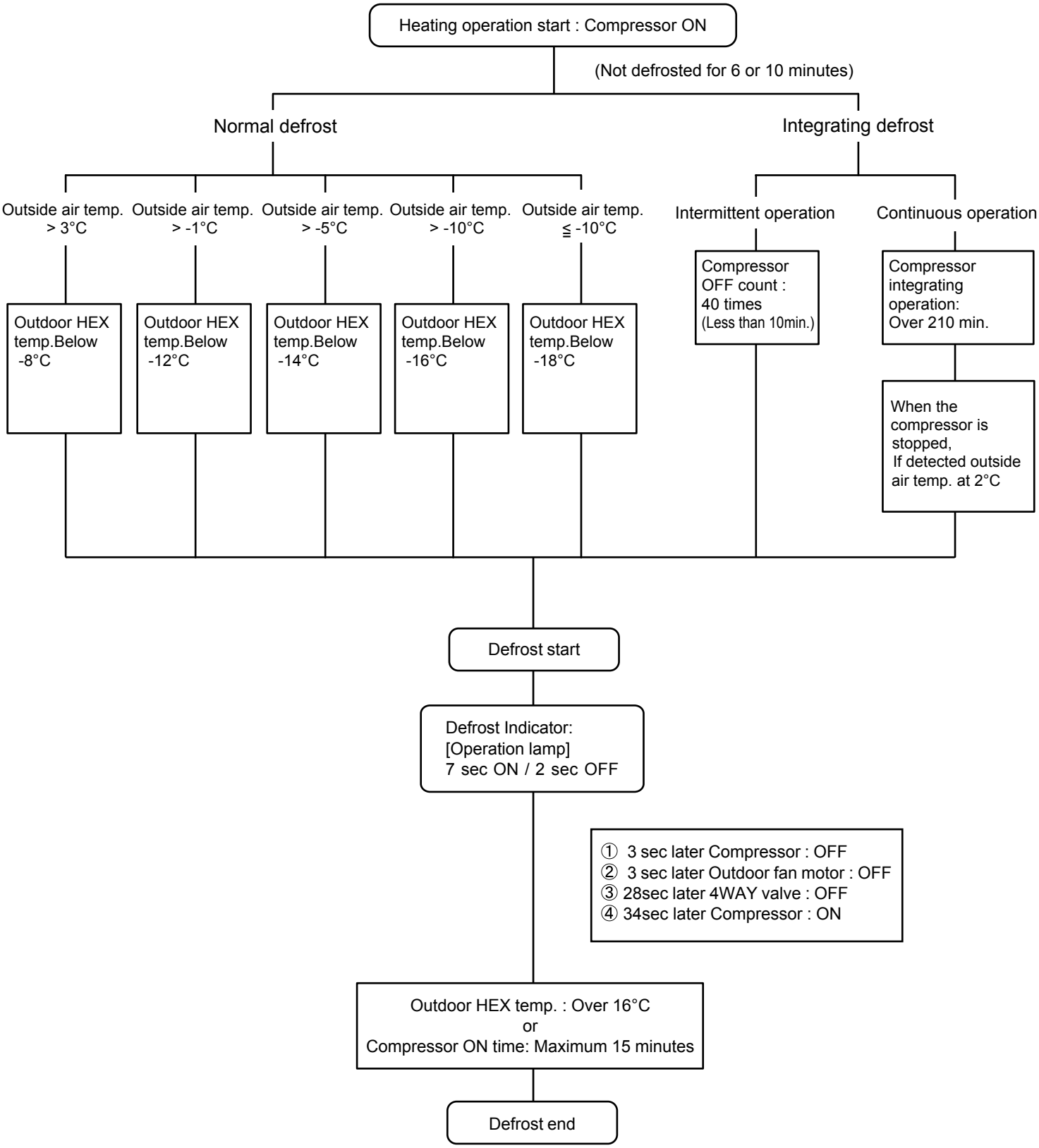

19. OFF DEFROST OPEARTION CONTROL

When operation stops in the [Heating operation] mode, if frost is adhered to the outdoor unit heat exchanger, the defrost operation will proceed automatically. In this time, if indoor unit operation lamp flashes slowly (7 sec ON / 2 sec OFF), the outdoor unit will allow the heat exchanger to defrost, and then stop.

1. OFF DEFROST OPERATION CONDITION

In heating operation, the outdoor heat exchanger temperature is less than -4°C,
and compressor operation integrating time lasts for more than 30 minutes,
and compressor operation contiguous time lasts for more than 10 minutes.

2. OFF DEFROST END CONDITION

Release Condition
Outdoor heat exchanger temperature sensor value is higher than 16°C or Compressor operation time has passed 15 minutes.

OFF Defrost Flow Chart

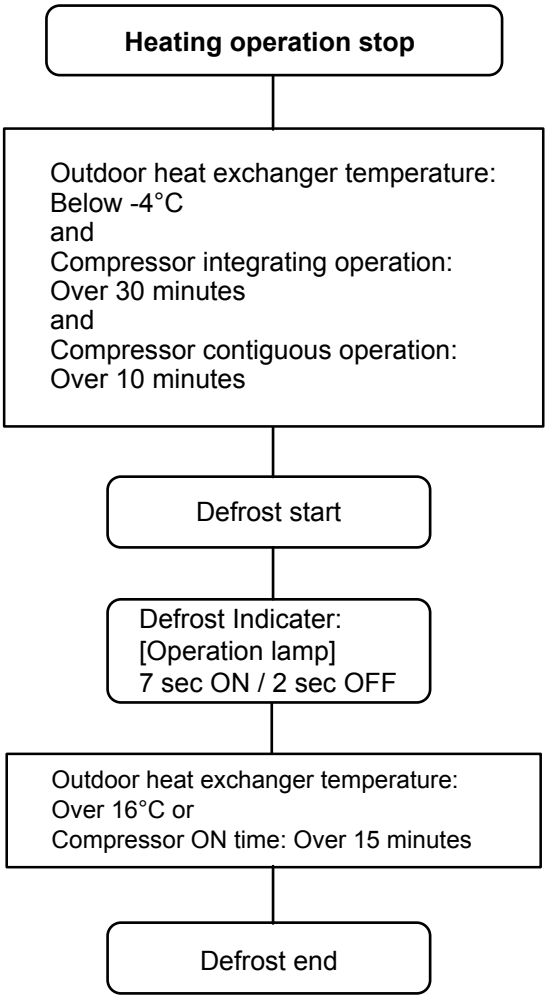

17. VARIOUS PROTECTIONS

1. DISCHARGE GAS TEMPERATURE OVER RISE PREVENTION CONTROL

The discharge gas thermosensor (discharge thermistor : Outdoor side) will detect discharge gas temperature.

When the discharge temperature becomes higher than ☐ ,the compressor frequency is decreased 20rps, and it continues to decrease the frequency for 20rps every 120 seconds until the temperature becomes lower than ☐.
When the discharge temperature becomes lower than ☐,the control of the compressor frequency is released.

When the discharge temperature becomes higher than ☐ ,the compressor stops.
When the discharge temperature becomes lower than 80°C ,the compressor operates.

(Table 16 : Discharge Temperature Over Rise Prevension Control / Release Temperature)

	Temperature Ⅰ	Temperature Ⅱ	Temperature Ⅲ
AO*G18LAC2	105°C	95°C	110°C

2. CURRENT RELEASE CONTROL

The compressor frequency is controlled so that the outdoor unit input current does not exceeds the current limit velue that was set up with the outdoor temperature.
The compressor frequency returns to the designated frequency of the indoor unit at the time when the frequency becomes lower than the release value.

3. ANTI-FREEZING CONTROL (Cooling mode)

When the indoor unit heat exchanger and
2-way valve temperature becomes lower than ☐ ,the compressor frequency is decreased 10rps, and it continues to decrease the frequency for 10rps every 120 seconds until the temperature becomes higher than ☐.

This operation is not released until both the temperature of the indoor unit heat exchanger and 2-way valve temperature exceed the release temperature.

(Table 17 : Anti-freezing Protection Operation / Release Temperature)

Outside air Temperature	Temperature Ⅰ		Temperature Ⅱ	
	Indoor Heat Ex. Temperature	2-way valve Temperature	Indoor Heat Ex. Temperature	2-way valve Temperature
≧12°C	3°C	2°C	6°C	5°C
<12°C	3°C	2°C	13°C	12°C

4. COOLING PRESSURE OVER RISE PROTECTION

When the outdoor unit heat exchange sensor temperature rises to 67.0°C or greater, the compressor is stopped and error display is indicated.

5. HIGH TEMPERATURE RELEASE CONTROL (HEATING MODE)

On heating mode, the compressor frequency is controlled as following based on the detection value of the indoor heat exchanger temperature sensor.

(Fig 14 : Heating Overload Protection Control)

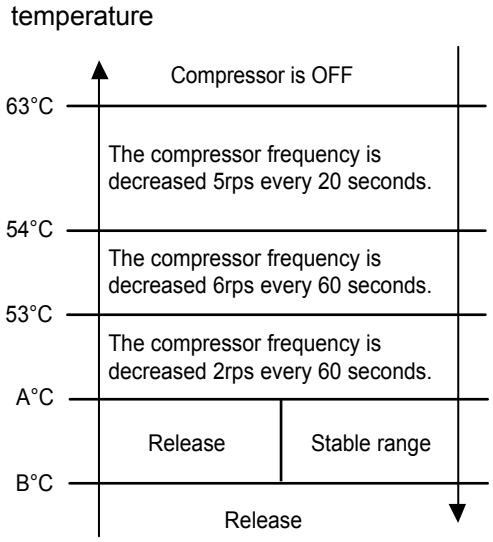

Outdoor heat exchange temperature	In one operation of the indoor unit : Qu air than		All indoor unit opeate, : Qu air	
	A°C	B°C	A°C	B°C
-9°C ≦ Th	52°C	50°C	48°C	46°C
-11°C ≦ Th < -9°C	52°C	50°C	48°C	46°C
-13°C ≦ Th < -11°C	52°C	48°C	48°C	46°C
-15°C ≦ Th < -13°C	50°C	46°C	48°C	46°C
Th < -15°C	48°C	44°C	48°C	46°C

Refrigerant
R410A

Slim Duct / Compact Cassette
Compact Wall Mounted
Floor type

INVERTER (MULTI)

2 . TROUBLE SHOOTING

2-1 ERROR DISPLAY

2-1-1 INDOOR UNIT AND WIRED REMOTE CONTROLLER DISPLAY

Please refer the flashing pattern as follows.
The Operation, Timer, Economy lamps operate as follows according to the error contents.

Error Contents	Indoor Unit Display			Wired Remote Controller Display	Trouble shooting
	Operation (Green)	Timer (Orange)	Economy (Green)		
Serial Communication Error	1 times	1 times	Continuous	11	1,2
Wired Remote Controller Communication Error	1 times	2 times	Continuous	12	3
Indoor Unit Capacity Error	2 times	2 times	Continuous	22	4
Indoor Unit Model Information Error EEPROM Access Abnormal	3 times	2 times	Continuous	32	5
Manual Auto Switch Error	3 times	5 times	Continuous	35	6
Indoor Room Thermistor Error	4 times	1 times	Continuous	41	7
Indoor Heat Ex. Thermistor Error	4 times	2 times	Continuous	42	8
Indoor Unit Fan Motor Error	5 times	1 times	Continuous	51	9
Drain pump Error	5 times	3 times	Continuous	53	10
Damper(OPEN/CLOSE) Detection Limit Switch Error	5 times	7 times	Continuous	57	11
Damper(OPEN/CLOSE) Simultaneous Detection Limit Switch Error	5 times	7 times	Continuous	57	12
Intake grille Error	5 times	8 times	Continuous	58	13
Outdoor Unit Model Information Error	6 times	2 times	Continuous	62	14
PFC circuit Error	6 times	4 times	Continuous	64	15
IPM Error	6 times	5 times	Continuous	65	16
Discharge Thermistor Error	7 times	1 times	Continuous	71	17
Compressor Thermistor Error	7 times	2 times	Continuous	72	18
Heat Ex. Thermistor Error	7 times	3 times	Continuous	73	19
Outdoor Thermistor Error	7 times	4 times	Continuous	74	20
2-way valve Thermistor Error	7 times	6 times	Continuous	76	21
3-way valve Thermistor Error	7 times	6 times	Continuous	76	22
Heat Sink Thermistor Error	7 times	7 times	Continuous	77	23
Over Current Error	9 times	4 times	Continuous	94	24
Compressor Control Error	9 times	5 times	Continuous	95	25
Outdoor Unit Fan Motor Error	9 times	7 times	Continuous	97	26
4 Way Valve Error	9 times	9 times	Continuous	99	27
Discharge Temp. Error	10 times	1 times	Continuous	A1	28
Compressure Temp. Error	10 times	3 times	Continuous	A3	29

2-1-2 WIRED REMOTE CONTROLLER DISPLAY

1. SELF - DIAGNOSIS

When " Er " in Temperature Display is displayed, inspection of the air conditioning system is necessary. Please consult authorized service personnel.

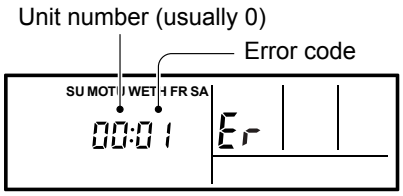

ex. Self-diagnosis check

2. ERROR CODE HISTORY DISPLAY

Up to 16 memorized error codes may be displayed for the indoor unit connected to the remote controller.

1. Stop the air conditioner operation.

2. Press the SET TEMPERATURE buttons ∨, ∧ simultaneously for 3 seconds or more to start the self-diagnosis.

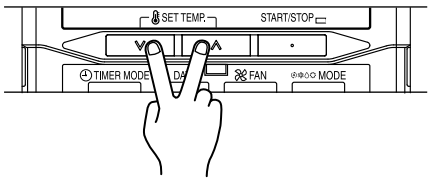

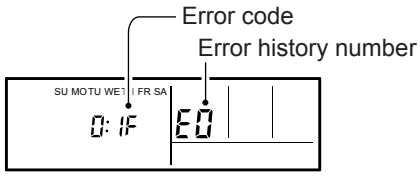

3. Press the SET TEMPERATURE button to select the error history number.

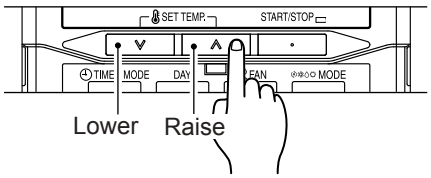

0 ↔ 1 ↔ 2 ↔ 3 ↔ 4 ↔ 5 ↔ 6 ↔ 7
F ↔ E ↔ d ↔ c ↔ b ↔ A ↔ 9 ↔ 8

4. Press the SET TEMPERATURE buttons ∨, ∧ simultaneously for 3 seconds or more or there is no key input for 60 seconds to stop the display.

2-2 TROUBLE SHOOTING WITH ERROR CODE

Trouble shooting 1 **OUTDOOR UNIT Error Method:** **Serial Communication Error** **(Serial Reverse Transfer Error)**	**Indicate or Display:** **Refer to error code table.**
Detective Actuators: Outdoor unit Main PCB Outdoor unit Fan motor	**Detective details:** When the indoor unit cannot receive the serial signal from Outdoor unit more than 2minutes after power ON, or the indoor unit cannot receive the serial signal more than 15seconds during normal operation.

Forecast of Cause:

1. Connection failure 2. External cause 3. Main PCB failure 4. Outdoor unit Fan motor failure

Check Point 1-1 : Reset the power and operate

・Does error indication reappear?

NO → **Check Point 1-2 : Check external cause such as noise**

・Check if the ground connection is proper.
・Check if there is any equipment that causes harmonic wave near the power cable (Neon light bulb or any electronic equipment which causes harmonic wave).

YES ↓

Check Point 2 : Check connection

・Check any loose or removed connection line of between indoor unit and outdoor unit.
>> If there is an abnormal condition, correct it by referring to Installation Manual or Data & Technical Manual.
・Check connection condition in control unit.
(If there is loose connector, open cable or mis-wiring)

OK ↓

Check Point 3 : Check the voltage of power supply

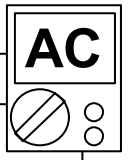

・Check the voltage of power supply
>> Check if AC198V(AC220V-10%) - 264V(AC240V+10%) appears at outdoor unit terminal L - N.

OK ↓

Check Point 4 : Check serial signal (Reverse transfer signal)

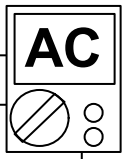

・Check serial signal (Reverse transfer signal)
>> Check if indicated value swings between AC70V and AC130V at outdoor unit terminal 1 - 3.
>> If it is abnormal, Check the parts as follows.
- Outdoor unit fan motor (PARTS INFORMATION 5)
>> If Outdoor fan motor is abnormal, replace Outdoor unit fan motor and Main PCB.
>> If the parts are normal, replace Main PCB.

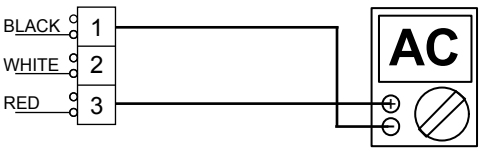

Trouble shooting 2 **INDOOR UNIT Error Method:** **Serial Communication Error** **(Serial Forward Transfer Error)**	**Indicate or Display:** **Refer to error code table.**
Detective Actuators: Indoor unit Controller PCB	**Detective details:** When the outdoor unit cannot properly receive the serial signal from indoor unit for 10 seconds or more.

Forecast of Cause:

1. Connection failure 2. External cause 3. Controller PCB failure

Check Point 1-1 : Reset the power and operate

・Does error indication reappear?

NO → **Check Point 1-2 : Check external cause such as noise**

・Check if the ground connection is proper.
・Check if there is any equipment that causes harmonic wave near the power cable (Neon light bulb or any electronic equipment which causes harmonic wave).

YES ↓

Check Point 2 : Check connection

・Check any loose or removed connection line of between indoor unit and outdoor unit.
>> If there is an abnormal condition, correct it by referring to Installation Manual or Data & Technical Manual.
・Check connection condition in control unit.
(If there is loose connector, open cable or mis-wiring)

OK ↓

Check Point 3 : Check the voltage of power supply

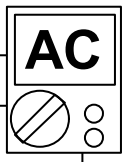

・Check the voltage of power supply
>> Check if AC198V(AC220V-10%) - 264V(AC240V+10%) appears at outdoor unit terminal L - N.

OK ↓

Check Point 4 : Check serial signal (Forward transfer signal)

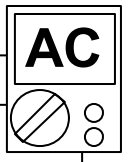

・Check serial signal (Forward transfer signal)
>> Check if indicated value swings between AC70V and AC130V at outdoor unit terminal 2 - 3.
>> If it is abnormal, replace Controller PCB.

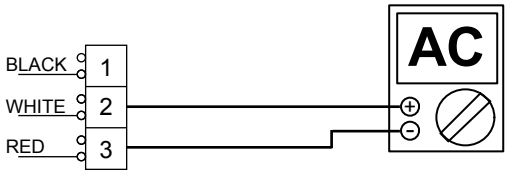

Trouble shooting 3 **INDOOR UNIT Error Method:** **Wired Remote Controller Communication Error**	**Indicate or Display:** **Refer to error code table.**
Detective Actuators: Indoor unit Controller PCB Wired Remote Controller (Option)	**Detective details:** When the indoor unit cannot properly receive the signal from Wired Remote Controller for 1 minute or more.

Forecast of Cause:

1. Connection failure 2. Wired Remote Controller failure 3. Controller PCB failure

Check Point 1 : Check the connection of terminal

Check & correct the followings.

- Check the connection of terminal between Wired Remote Controller and indoor unit, and check if there is a disconnection of the cable.

OK

Check Point 2 : Check Wired Remote Controller and Controller PCB

- Check Voltage at terminal 1-3 of Controller PCB or Communication PCB. (Power supply to Remote Control)
  Cassette, Duct Type : CN14
  Wall mount ,Floor Type : CN6
  Compact Wall mount Type : CN305(UTY-XCBXZ1)

>> If it is DC12V, Remote Control is failure. (Controller PCB is normal) >> Replace Remote Control
>> If it is DC 0V, Controller PCB is failure. (Check Remote Control once again) >> Replace Controller PCB

Trouble shooting 4 **INDOOR UNIT Error Method:** **Indoor Unit Capacity Error**	**Indicate or Display:** **Refer to error code table.**

Detective Actuators:	**Detective details:**
All indoor unit	The total capacity of the indoor unit if it is install beyond.

Forecast of Cause :

1. The selection of indoor units is incorrect 2. Main PCB(Outdoor unit) failure

Check Point 1 : Check the total capacity of indoor unit

・Check the total capacity of the connected indoor units.
>> If abnormal condition is found, correct it by referring to Installation Manual or Design & Technical Manual.

OK

Check Point 2 : Replace Main PCB

▶ **If Check Point 1 do not improve the symptom, replace Main PCB of Outdoor unit.**

Trouble shooting 5 **INDOOR UNIT Error Method:** **Indoor Unit Model Information Error** **EEPROM Access Abnormal**	**Indicate or Display:** **Refer to error code table.**

Detective Actuators:	**Detective details:**
Indoor unit Controller PCB	When power is on and there is some below case. ① When model information of EEPROM is incorrect. ② When the access to EEPROM failed.

Forecast of Cause:

1. External cause 2. Defective connection of electric components 3. Controller PCB failure

Check Point 1-1 : Reset Power Supply and operate

・Does Error indication show again?

NO → **Check Point 1-2 : Check external cause such as noise**

・Check if the ground connection is proper.
・Check if there is any equipment that causes harmonic wave near the power cable (Neon light bulb or any electronic equipment which causes harmonic wave).

YES ↓

Check Point 2 : Check Indoor unit electric components

・Check all connectors.
(loose connector or incorrect wiring)
・Check any shortage or corrosion on PCB.

↓

Check Point 3 : Replace Controller PCB

▶ **Change Controller PCB.**

Note : EEPROM

EEPROM(Electronically Erasable and Programmable Read Only Memory) is a non-volatile memory which keeps memorized information even if power is turned off. It can change the contents electronically.
To change the contents, it uses higher voltage than normal, and it can not change a partial contents. (Rewriting shall be done upon erasing the all contents.)
There is a limit in a number of rewriting.

Trouble shooting 6 **INDOOR UNIT Error Method:** **Manual Auto Switch Error**	**Indicate or Display:** **Refer to error code table.**
Detective Actuators: Indoor Unit Controller PCB Indicator PCB Manual Auto Switch	**Detective details:** When the Manual Auto Switch becomes ON for consecutive 60 or more seconds.

Forecast of Cause :

1. Manual Auto Switch failure 2. Controller PCB and Indicator PCB failure

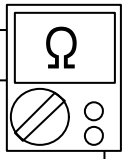

Check Point 1 : Check the Manual Auto Switch

・Check if Manual Auto Switch is kept pressed.
・Check ON/OFF switching operation by using a meter.
>> If Manual Auto Switch is disabled (on/off switching), replace it.

OK

Check Point 2 : Replace Controller PCB and Indicator PCB

▶ **If Check Point 1 do not improve the symptom, replace Controller PCB and Indicator PCB.**

Trouble shooting 7 **INDOOR UNIT Error Method:** **Indoor Room Thermistor Error**	**Indicate or Display:** **Refer to error code table.**

Detective Actuators:	**Detective details:**
Indoor Unit Controller PCB Circuit Room temperature Thermistor	Room temperature thermistor is open or short is detected always.

Forecast of Cause : 1. Connector failure connection 2. Thermistor failure 3. Controller PCB failure

Check Point 1 : Check connection of Connector

- Check if connector is loose or removed
- Check erroneous connection
- Check if thermistor cable is open

>>Reset Power when reinstalling due to removed connector or incorrect wiring.

OK

Check Point 2 : Remove connector and check Thermistor resistance value

Thermistor Characteristics (Rough value)

Temperature (°C)	-10	-5	0	5	10	15	20	25
Resistance Value (kΩ)	58.2	44.0	33.6	25.2	20.2	15.8	12.5	10.0

Temperature (°C)	30	35	40	45
Resistance Value (kΩ)	8.0	6.5	5.3	4.3

▶ **If Thermistor is either open or shorted, replace it and reset the power.**

OK

Check Point 3 : Check voltage of Controller PCB (DC5.0V)

Make sure circuit diagram of each indoor unit and check terminal voltage at Thermistor (DC5.0V)

- Duct circuit diagram (Connector connection)

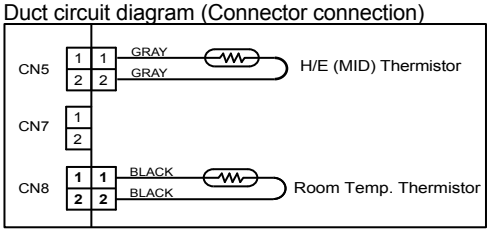

- Small size Wall mount circuit diagram(Connector connection)

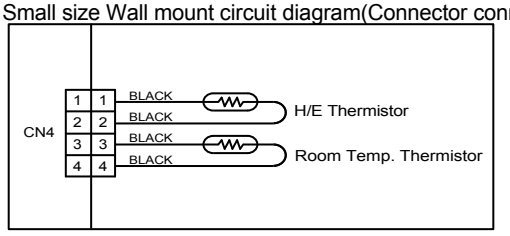

- Cassette circuit diagram (Connector connection)

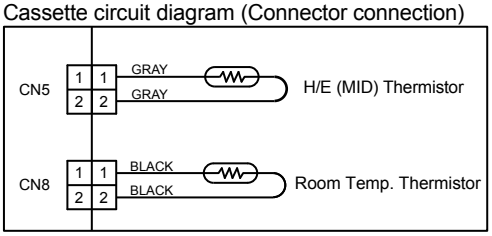

- Wall mount Scircuit diagram (Direct soldering to PCB)

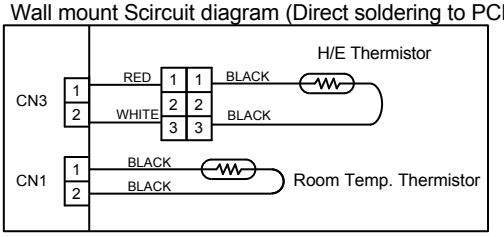

- Floor circuit diagram (Connector connection and Direct soldering to PCB)

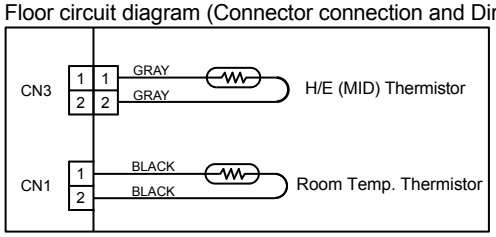

▶ **If the voltage does not appear, replace Controller PCB.**

Trouble shooting 8 **INDOOR UNIT Error Method:** **Indoor Heat Ex. Thermistor Error**	**Indicate or Display:** **Refer to error code table.**

Detective Actuators:	**Detective details:**
Indoor Unit Controller PCB Heat Exchanger (MID) Thermistor	Heat Exchanger (MID) thermistor is open or short is detected always.

Forecast of Cause : 1. Connector failure connection 2. Thermistor failure 3. Controller PCB failure

Check Point 1 : Check connection of Connector

- Check if connector is loose or removed
- Check erroneous connection
- Check if thermistor cable is open

>>Reset Power when reinstalling due to removed connector or incorrect wiring.

OK

Check Point 2 : Remove connector and check Thermistor resistance value

Thermistor Characteristics (Rough value)

Temperature (°C)	-30	-20	-10	-5	0	5	10	15	20
Resistance Value (kΩ)	1131.9	579.6	312.3	233.2	176.0	134.2	103.3	80.3	62.9

Temperature (°C)	25	30	35	40	45	50	55	60	63
Resistance Value (kΩ)	49.7	39.6	31.7	25.6	20.8	17.1	14.1	11.6	10.4

▶ **If Thermistor is either open or shorted, replace it and reset the power.**

OK

Check Point 3 : Check voltage of Controller PCB (DC5.0V)

Make sure circuit diagram of each indoor unit and check terminal voltage at Thermistor (DC5.0V)

- Duct circuit diagram (Connector connection)

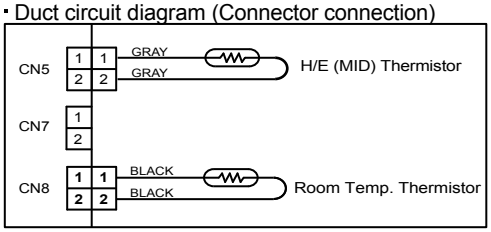

- Small size Wall mount circuit diagram(Connector connection)

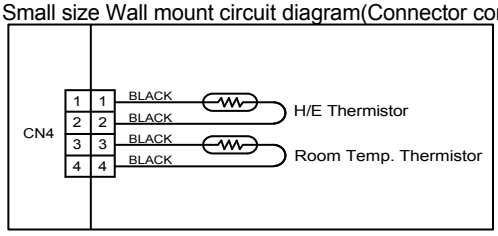

- Cassette circuit diagram (Connector connection)

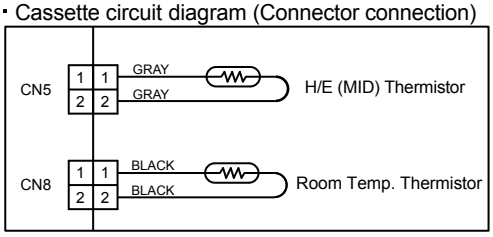

- Wall mount Scircuit diagram (Direct soldering to PCB)

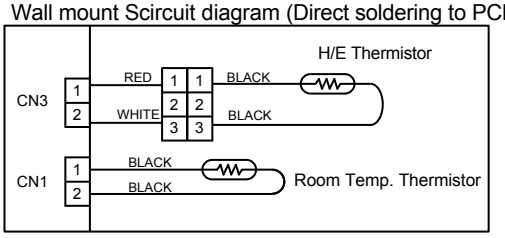

- Floor circuit diagram (Connector connection and Direct soldering to PCB)

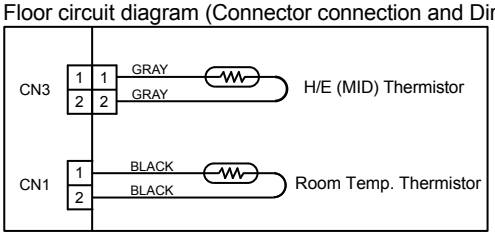

▶ **If the voltage does not appear, replace Controller PCB.**

Trouble shooting 9 **INDOOR UNIT Error Method:** **Indoor Unit Fan Motor Error**	**Indicate or Display:** **Refer to error code table.**

Detective Actuators:	**Detective details:**
Indoor unit Controller PCB Indoor unit fan motor	When the condition that actual frequency of Indoor Fan is below 1/3 of target frequency is continued more than 56 seconds.

Forecast of Cause:

1. Fan rotation failure 2. Fan motor winding open 3. Motor protection by surrounding temperature rise
4. Control PCB failure 5. Indoor unit fan motor failure

Check Point 1 : Check rotation of Fan

・Rotate the fan by hand when operation is off.
(Check if fan is caught, dropped off or locked motor)
>>If Fan or Bearing is abnormal, replace it.

↓ **OK**

Check Point 2 : Check ambient temp. around motor

・Check excessively high temperature around the motor.
(If there is any surrounding equipment that causes heat)
>>Upon the temperature coming down, restart operation.

↓ **OK**

Check Point 3 : Check Indoor unit fan motor

・Check Indoor unit fan motor. (PARTS INFORMATION 4)
>>If Indoor unit fan motor is abnormal, replace Indoor unit fan motor.

↓ **OK**

Check Point 4 : Replace Controller PCB

▶ **If Check Point 1- 3 do not improve the symptom, replace Controller PCB.**

Trouble shooting 10 **INDOOR UNIT Error Method:** Drain pump Error	**Indicate or Display:** Refer to error code table.
Detective Actuators: Indoor Unit Controller PCB Circuit Float Switch	**Detective details:** When Float switch is ON for more than 3 minutes.

Forecast of Cause : 1. Float switch failure 2. Shorted connector/wire 3. Controller PCB failure 4. Drain pump failure 5. Hose clogging

Check Point 1 : Check Float Switch

- ☐ Check operation of float switch. (any blocking by dust, etc.)
- ☐ Remove Float switch and check ON/OFF switching operation by using a meter.
  >>If Float switch is abnormal, replace it.

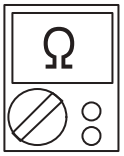

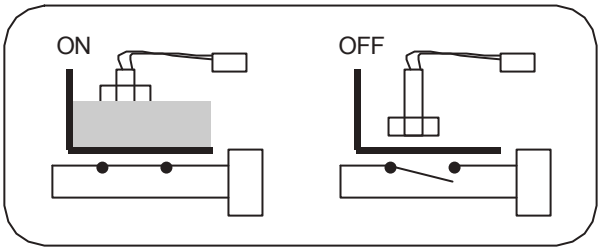

OK

Check Point 2 : Check Connector (CN 9) / Wire

- ☐ Check loose contact of CN9 /shorted wire (pinched wire).
  >>Replace Float switch if the wire is abnormal

OK

Check Point 3 : Check Drain Hose

- ☐ Check Drain Hose .
  >>If there is Hose clogging. Please clear the clog.

OK

Check Point 4 : Check Controller PCB

- ▶ **If Check Point 1 ~ 3 do not improve the symptom, change Controller PCB and execute the check operation again.**

Attention!!
Wall mount / Small size wall mount type does not have a float switch.
In this case, replace Controller PCB and set up the original address.
Please refer to.

Trouble shooting 11 **INDOOR UNIT Error Method:** **Damper(OPEN/CLOSE) Detection Limit Switch Error**	**Indicate or Display:** **Refer to error code table.**

Detective Actuators:	**Detective details:**
Indoor unit Controller PCB Circuit Limit switch Damper	When limit switch were not able to detect the close though the damper close. (Upper air flow) When limit switch were not able to detect the open though the damper open. (Upper & Lower air flow)

Forecast of Cause :

1. Limit switch failure
2. Shorted connector/ wire
3. Damper faulure
4. Controller PCB failure

Check Point 1 : Check Limit switch

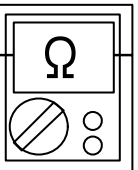

- Check operation of limit switch. (any blocking by dust, etc.)
- Remove Limit switch and check ON/OFF switching operation by using a meter.

>>If Limit switch is detective, replace it.

OK

Check Point 2 : Check Connector (CN18) / Wire

- Check loose contact of CN18 /shorted wire (pinched wire).

>>Replace Limit switch if the wire is abnormal

OK

Check Point 3 : Check Damper

- Check the obstruction of damper movement.
- Check the damper movement.

>>Replace Damper if the damper is abnormal

OK

Check Point 4 : Replace Controller PCB

▶ **If Check Point 1～3 do not improve the symptom, change Controller PCB.**

Trouble shooting 12 **INDOOR UNIT Error Method:** **Damper(OPEN/CLOSE) Simultaneous Detection Limit Switch Error**	**Indicate or Display:** **Refer to error code table.**

Detective Actuators:	**Detective details:**
Indoor unit Controller PCB Circuit Limit switch	When the limit switch detects open and close at the simultaneous.

Forecast of Cause :

1. Limit switch failure
2. Shorted connector/ wire
3. Controller PCB failure

Check Point 1 : Check Limit switch

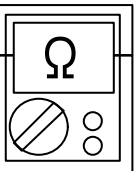

- Check operation of limit switch. (any blocking by dust, etc.)
- Remove Limit switch and check ON/OFF switching operation by using a meter.

>>If Limit switch is detective, replace it.

OK

Check Point 2 : Check Connector (CN18) / Wire

- Check loose contact of CN18 /shorted wire (pinched wire).

>>Replace Limit switch if the wire is abnormal

OK

Check Point 3 : Replace Controller PCB

▶ **If Check Point 1 & 2 do not improve the symptom, change Controller PCB.**

Trouble shooting 13 **INDOOR UNIT Error Method:** **Intake grille error**	**Indicate or Display:** **Refer to error code table.**

Detective Actuators:	**Detective details:**
Indoor unit Controller PCB Micro switch	When the Micro switch is detected open while running the compressor.

Forecast of Cause :

1. Micro switch failure 2. Shorted connector/ wire 3.Controller PCB failure

Check Point 1 : Check Limit switch

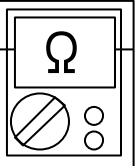

- Check operation of Micro switch. (any blocking by dust, etc.)
- Remove Micro switch and check ON/OFF switching operation by using a meter.

>>If Micro switch is detective, replace it.

OK

Check Point 2 : Check Connector (CN11) / Wire

- Check loose contact of CN11 /shorted wire (pinched wire).

>>Replace Micro switch if the wire is abnormal

OK

Check Point 3 : Replace Controller PCB

▶ **If Check Point 1 & 2 do not improve the symptom, change Controller PCB.**

Trouble shooting 14 **INDOOR UNIT Error Method:** **Outdoor Unit Model Information Error**	**Indicate or Display:** **Refer to error code table.**

Detective Actuators:	**Detective details:**
Outdoor unit Main PCB	When power is on and there is some below case. ① When model information of EEPROM is incorrect. ② When the access to EEPROM failed.

Forecast of Cause:

1. External cause 2. Defective connection of electric components 3. Main PCB failure

Check Point 1-1 : Reset Power Supply and operate

・Does Error indication show again?

NO → **Check Point 1-2 : Check external cause such as noise**

・Check if the ground connection is proper.
・Check if there is any equipment that causes harmonic wave near the power cable (Neon light bulb or any electronic equipment which causes harmonic wave).

YES ↓

Check Point 2 : Check Indoor unit electric components

・Check all connectors.
(loose connector or incorrect wiring)
・Check any shortage or corrosion on PCB.

OK ↓

Check Point 3 : Replace Main PCB

▶ **If Check Point 1,2 do not improve the symptom, replace Main PCB.**

Note : EEPROM

EEPROM(Electronically Erasable and Programmable Read Only Memory) is a non-volatile memory which keeps memorized information even if power is turned off. It can change the contents electronically.
To change the contents, it uses higher voltage than normal, and it can not change a partial contents. (Rewriting shall be done upon erasing the all contents.)
There is a limit in a number of rewriting.

Trouble shooting 15 **OUTDOOR UNIT Error Method:** **PFC circuit Error**	**Indicate or Display:** **Refer to error code table.**

Detective Actuators:	**Detective details:**
Outdoor unit Main PCB	When inverter output DC voltage is higher than 415V for over 3 seconds, the compressor stops. If the same operation is repeated 5 times, the compressor stops permanently.

Forecast of Cause :

1. External cause 2. Connector connection failure 3. Main PCB failure

Check Point 1 : Check external cause at Indoor and Outdoor (Voltage drop or Noise)

- Instant drop : Check if there is a large load electric apparatus in the same circuit.
- Momentary power failure : Check if there is a defective contact or leak current in the power supply circuit.
- Noise : Check if there is any equipment causing harmonic wave near electric line. (Neon bulb or electric equipment that may cause harmonic wave) Check the complete insulation of grounding.

OK

Check Point 2 : Check connection of Connector

- Check if connector is removed.
- Check erroneous connection.
- Check if cable is open.

>>Upon correcting the removed connector or mis-wiring, reset the power.

OK

Check Point 3 : Replace Main PCB

▶ **If Check Point 1, 2 do not improve the symptom, change Main PCB.**

Trouble shooting 16 **OUTDOOR UNIT Error Method:** **IPM Error**	**Indicate or Display:** **Refer to error code table.**
Detective Actuators: Outdoor unit Main PCB	**Detective details:** When the signal from FO terminal of IPM in Main PCB is "L"(=0V) while the compressor stops.

Forecast of Cause :

1. Main PCB failure

Check Point 1 : Replace Main PCB
▶ **Change Main PCB.**

Trouble shooting 17 **OUTDOOR UNIT Error Method:** **Outdoor Discharge Thermistor Error**	**Indicate or Display:** **Refer to error code table.**

Detective Actuators:	**Detective details:**
Outdoor Unit Main PCB Circuit Discharge Pipe Temperature Thermistor	When Discharge Pipe Temperature Thermistor open or short-circuit is detected at power ON or while running the compressor.

Forecast of Cause :

1. Connector connection failure 2.Thermistor failure 3. Main PCB failure

Check Point 1 : Check connection of Connector

- Check if connector is removed.
- Check erroneous connection.
- Check if thermistor cable is open.

>>Upon correcting the removed connector or mis-wiring, reset the power.

OK

Check Point 2 : Remove connector and check Thermistor resistance value

Thermistor Characteristics (Approx. value)

Temperature(°C)	-30	-20	-10	0	10	20	30	40	50
Resistance Value (kΩ)	1013.1	531.6	292.9	168.6	100.9	62.5	40.0	26.3	17.8

Temperature(°C)	60	70	80	90	100	110	120
Resistance Value (kΩ)	12.3	8.7	6.3	4.6	3.4	2.6	2.0

▶ **If Thermistor is either open or shorted, replace it and reset the power.**

OK

Check Point 3 : Check voltage of Main PCB (DC5.0V)

Make sure circuit diagram of outdoor unit and check terminal voltage at Thermistor (DC5.0V)

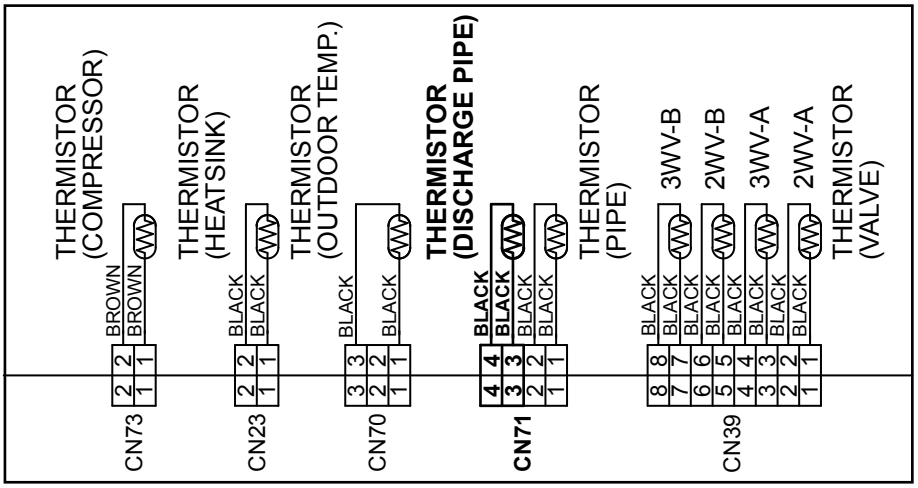

▶ **If the voltage does not appear, replace Main PCB.**

Trouble shooting 18 **OUTDOOR UNIT Error Method:** **Compressor Thermistor Error**	**Indicate or Display:** **Refer to error code table.**

Detective Actuators:	**Detective details:**
Outdoor Unit Main PCB Circuit Compressor Temperature Thermistor	When Compressor Temperature Thermistor open or short-circuit is detected at power ON or while running the compressor.

Forecast of Cause :

1. Connector connection failure 2. Thermistor failure 3. Main PCB failure

Check Point 1 : Check connection of Connector

- Check if connector is removed.
- Check erroneous connection.
- Check if thermistor cable is open.

>>Upon correcting the removed connector or mis-wiring, reset the power.

OK

Check Point 2 : Remove connector and check Thermistor resistance value

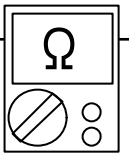

Thermistor Characteristics (Rough value)

Temperature(°C)	-30	-20	-10	0	10	20	30	40	50
Resistance Value (kΩ)	1013.1	531.6	292.9	168.6	100.9	62.5	40.0	26.3	17.8

Temperature(°C)	60	70	80	90	100	110	120
Resistance Value (kΩ)	12.3	8.7	6.3	4.6	3.4	2.6	2.0

▶ **If Thermistor is either open or shorted, replace it and reset the power.**

OK

Check Point 3 : Check voltage of Main PCB (DC5.0V)

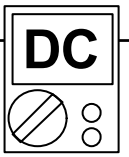

Make sure circuit diagram of outdoor unit and check terminal voltage at Thermistor (DC5.0V)

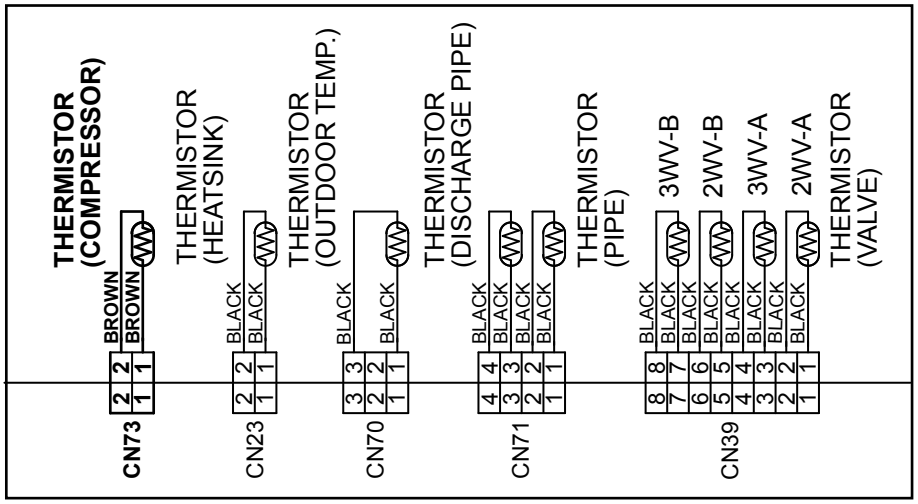

▶ **If the voltage does not appear, replace Main PCB.**

Trouble shooting 19 **OUTDOOR UNIT Error Method:** **Heat Ex. Thermistor Error**	**Indicate or Display:** **Refer to error code table.**

Detective Actuators:	**Detective details:**
Outdoor Unit Main PCB Circuit Heat Exchanger Temperature Thermistor	When Heat Exchanger Temperature Thermistor open or short-circuit is detected at power ON or while running the compressor.

Forecast of Cause :

1. Connector connection failure 2.Thermistor failure 3. Main PCB failure

Check Point 1 : Check connection of Connector

- Check if connector is removed.
- Check erroneous connection.
- Check if thermistor cable is open.

>>Upon correcting the removed connector or mis-wiring, reset the power.

OK

Check Point 2 : Remove connector and check Thermistor resistance value

Thermistor Characteristics (Approx. value)

Temperature(°C)	-30	-20	-10	0	10	20	30	40	50
Resistance Value (kΩ)	95.6	50.3	27.8	16.1	9.6	6.0	3.8	2.5	1.7

Temperature(°C)	60	70	80
Resistance Value (kΩ)	1.2	0.8	0.6

▶ **If Thermistor is either open or shorted, replace it and reset the power.**

OK

Check Point 3 : Check voltage of Main PCB (DC5.0V)

Make sure circuit diagram of outdoor unit and check terminal voltage at Thermistor (DC5.0V)

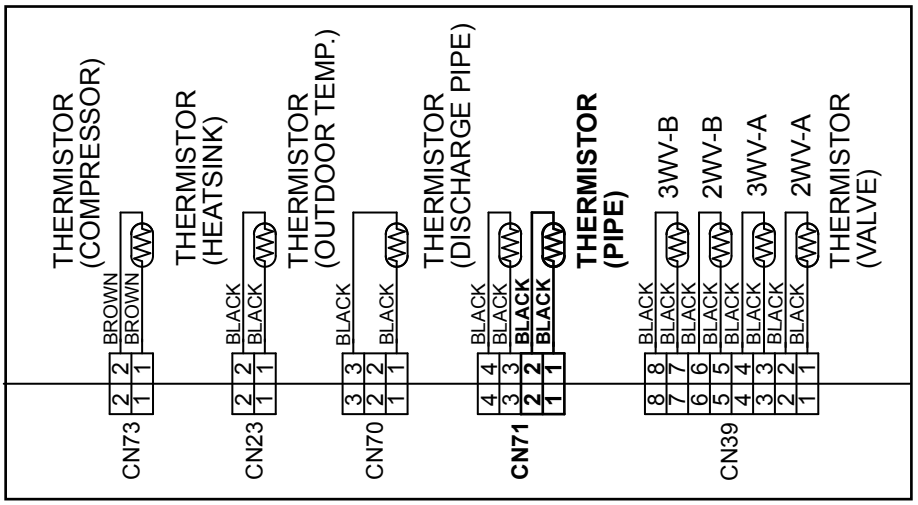

▶ **If the voltage does not appear, replace Main PCB.**

Trouble shooting 20 **OUTDOOR UNIT Error Method:** **Outdoor Thermistor Error**	**Indicate or Display:** **Refer to error code table.**

Detective Actuators:	**Detective details:**
Outdoor Unit Main PCB Circuit Outdoor Temperature Thermistor	When Outdoor Temperature Thermistor open or short-circuit is detected at power ON or while running the compressor.

Forecast of Cause :

1. Connector connection failure 2.Thermistor failure 3. Main PCB failure

Check Point 1 : Check connection of Connector

- Check if connector is removed.
- Check erroneous connection.
- Check if thermistor cable is open.

>>Upon correcting the removed connector or mis-wiring, reset the power.

OK

Check Point 2 : Remove connector and check Thermistor resistance value

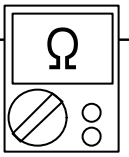

Thermistor Characteristics (Approx. value)

Temperature(°C)	-30	-20	-10	0	10	20	30	40
Resistance Value (kΩ)	224.3	115.2	62.3	35.2	20.7	12.6	8.0	5.2

Temperature(°C)	50	60	70	80
Resistance Value (kΩ)	3.5	2.4	1.6	1.2

▶ **If Thermistor is either open or shorted, replace it and reset the power.**

OK

Check Point 3 : Check voltage of Main PCB (DC5.0V)

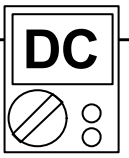

Make sure circuit diagram of outdoor unit and check terminal voltage at Thermistor (DC5.0V)

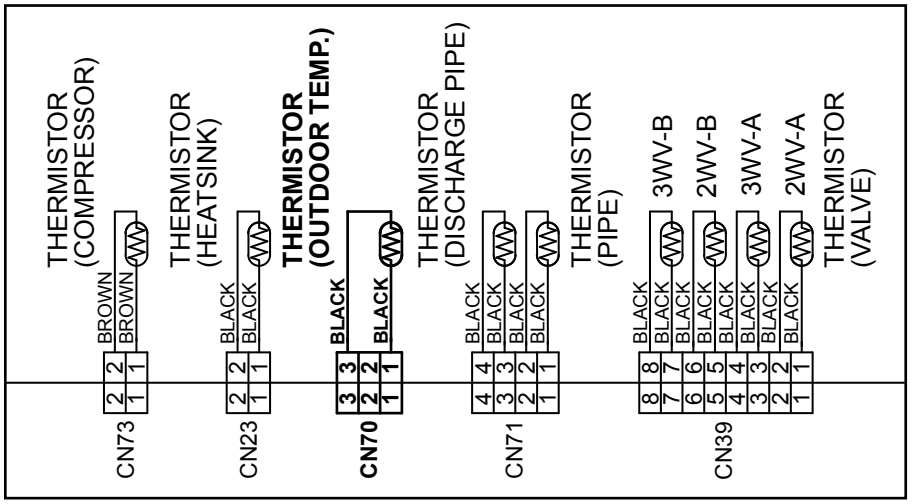

▶ **If the voltage does not appear, replace Main PCB.**

Trouble shooting 21 **OUTDOOR UNIT Error Method:** **2-way valve Thermistor Error**	**Indicate or Display:** **Refer to error code table.**

Detective Actuators:	**Detective details:**
Outdoor Unit Main PCB Circuit 2-way valve Temperature Thermistor	When 2-way valve Temperature Thermistor open or short-circuit is detected at power ON or while running the compressor.

Forecast of Cause :

1. Connector connection failure 2.Thermistor failure 3. Main PCB failure

Check Point 1 : Check connection of Connector

- Check if connector is removed.
- Check erroneous connection.
- Check if thermistor cable is open.

>>Upon correcting the removed connector or mis-wiring, reset the power.

OK

Check Point 2 : Remove connector and check Thermistor resistance value

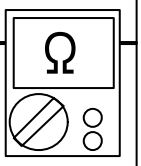

Thermistor Characteristics (Approx. value)

Temperature(°C)	-30	-20	-10	0	10	20	30	40
Resistance Value (kΩ)	1131.9	579.6	312.3	176.0	103.3	62.9	39.6	25.6

Temperature(°C)	50	60	70	80
Resistance Value (kΩ)	17.1	11.6	8.1	5.8

▶ **If Thermistor is either open or shorted, replace it and reset the power.**

OK

Check Point 3 : Check voltage of Main PCB (DC5.0V)

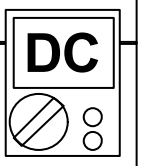

Make sure circuit diagram of outdoor unit and check terminal voltage at Thermistor (DC5.0V)

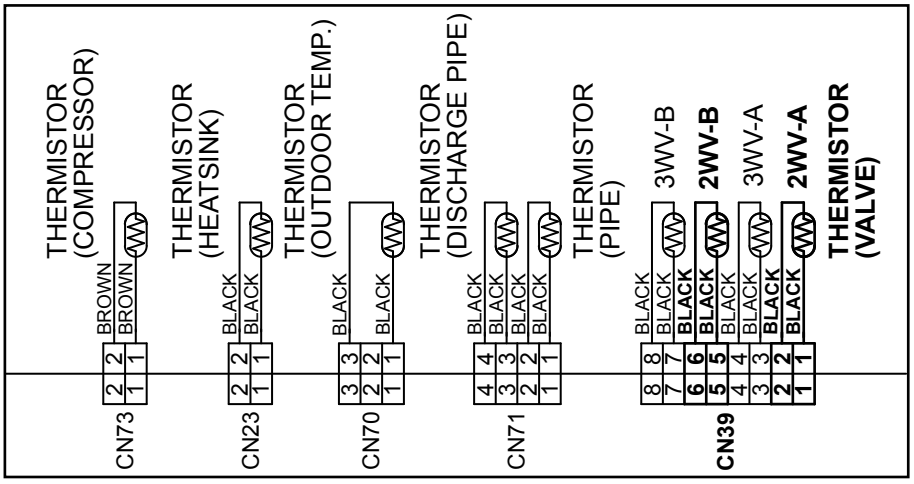

▶ **If the voltage does not appear, replace Main PCB.**

Trouble shooting 22 **OUTDOOR UNIT Error Method:** **3-way valve Thermistor Error**	**Indicate or Display:** **Refer to error code table.**

Detective Actuators:	**Detective details:**
Outdoor Unit Main PCB Circuit 3-way valve Temperature Thermistor	When 3-way valve Temperature Thermistor open or short-circuit is detected at power ON or while running the compressor.

Forecast of Cause :

1. Connector connection failure 2.Thermistor failure 3. Main PCB failure

Check Point 1 : Check connection of Connector

- Check if connector is removed.
- Check erroneous connection.
- Check if thermistor cable is open.

>>Upon correcting the removed connector or mis-wiring, reset the power.

OK

Check Point 2 : Remove connector and check Thermistor resistance value

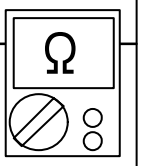

Thermistor Characteristics (Approx. value)

Temperature(°C)	-30	-20	-10	0	10	20	30	40
Resistance Value (kΩ)	1131.9	579.6	312.3	176.0	103.3	62.9	39.6	25.6

Temperature(°C)	50	60	70	80
Resistance Value (kΩ)	17.1	11.6	8.1	5.8

▶ **If Thermistor is either open or shorted, replace it and reset the power.**

OK

Check Point 3 : Check voltage of Main PCB (DC5.0V)

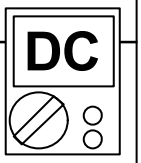

Make sure circuit diagram of outdoor unit and check terminal voltage at Thermistor (DC5.0V)

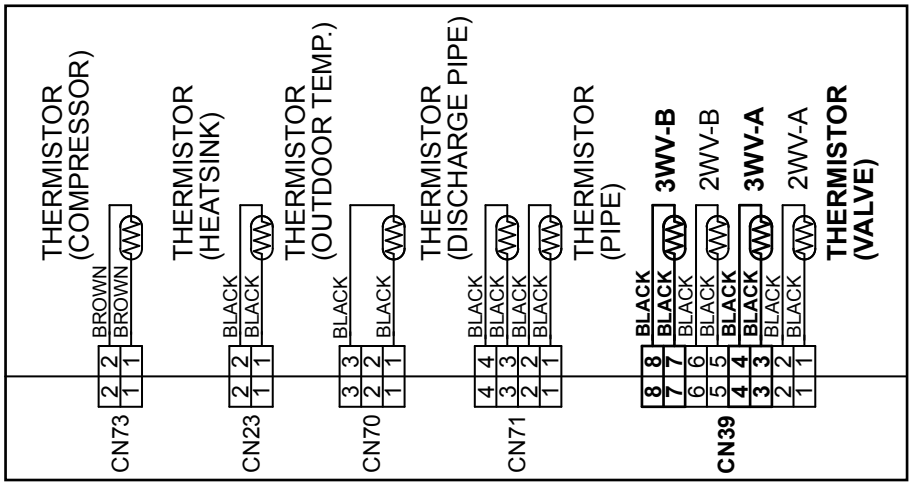

▶ **If the voltage does not appear, replace Main PCB.**

Trouble shooting 23 **OUTDOOR UNIT Error Method:** **Heat Sink Thermistor Error**	**Indicate or Display:** **Refer to error code table.**

Detective Actuators:	**Detective details:**
Outdoor Unit Main PCB Circuit Heat Sink Temperature Thermistor	When Heat Sink Temperature Thermistor open or short-circuit is detected at power ON or while running the compressor.

Forecast of Cause :

1. Connector connection failure 2.Thermistor failure 3. Main PCB failure

Check Point 1 : Check connection of Connector

- Check if connector is removed.
- Check erroneous connection.
- Check if thermistor cable is open.

>>Upon correcting the removed connector or mis-wiring, reset the power.

OK

Check Point 2 : Remove connector and check Thermistor resistance value

Thermistor Characteristics (Approx. value)

Temperature(°C)	-30	-20	-10	0	10	20	30	40
Resistance Value (kΩ)	94.3	49.6	27.4	15.8	9.5	5.9	3.8	2.5

Temperature(°C)	50	60	70	80	90	100
Resistance Value (kΩ)	1.7	1.2	0.8	0.6	0.4	0.3

▶ **If Thermistor is either open or shorted, replace it and reset the power.**

OK

Check Point 3 : Check voltage of Main PCB (DC5.0V)

Make sure circuit diagram of outdoor unit and check terminal voltage at Thermistor (DC5.0V)

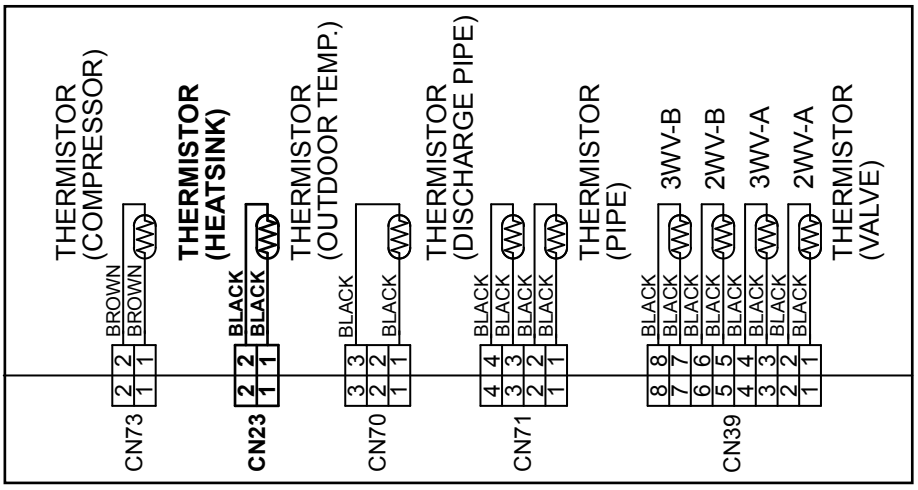

▶ **If the voltage does not appear, replace Main PCB.**

Trouble shooting 24 **OUTDOOR UNIT Error Method:** **Over Current Error**	**Indicate or Display:** **Refer to error code table.**

Detective Actuators:	**Detective details:**
Outdoor unit Main PCB Compressor	① When more than normal operating current to IPM in Main PCB flows, the compressor stops. ② After the compressor restarts, if the same operation is repeated within 40sec, the compressor stops again. ③ If ① and ②repeats 5 times, the compressor stops permanently.

Forecast of Cause :

1. Defective connection of electric components
2. Outdoor fan operation failure
3. Outdoor heat exchanger clogged
4. Compressor failure
5. Main PCB failure

Check Point 1 : Check connections of Outdoor unit electrical components

- Check if the terminal connection is loose.
- Check if connector is removed.
- Check erroneous connection.
- Check if cable is open.

>>Upon correcting the removed connector or mis-wiring, reset the power.

OK

Check Point 2 : Check Outdoor fan, Heat exchanger

- Is there anything obstructing the air distribution circuit?
- Is there any clogging of Outdoor Heat Exchanger?
- Is the Fan rotating by hand when operation is off ?

>> If the fan motor is locked, replace it.

OK

Check Point 3 : Check Outdoor fan

- Check Outdoor fan motor. (Refer to Trouble shooting 26)

>> If the fan motor is failure, replace it.

OK

Check Point 4 : Check Compressor

- Check Compressor. (PARTS INFORMATION 2)

OK

Check Point 5 : Replace Main PCB

▶ **If Check Point 1 ~ 4 do not improve the symptom, change Main PCB.**

Trouble shooting 25 **OUTDOOR UNIT Error Method:** **Compressor Control Error**	**Indicate or Display:** **Refer to error code table.**

Detective Actuators:	**Detective details:**
Outdoor unit Main PCB Compressor	① While running the compressor, if the detected rotor location is out of phase with actual rotor location more than 105°, the compressor stops. ② After the compressor restarts, if the same operation is repeated within 40sec, the compressor stops again. ③ If ① and ②repeats 5 times, the compressor stops permanently.

Forecast of Cause :

1. Defective connection of electric components 2. Main PCB failure 3. Compressor failure

Check Point 1 : Check connection of around the Compressor components

For Compressor Terminal, Main PCB

- Check if connector is removed.
- Check erroneous connection.
- Check if cable is open.
  (Refer to PARTS INFORMATION 2)

>>Upon correcting the removed connector or mis-wiring, reset the power.

OK

Check Point 2: Replace Main PCB

▶ **If Check Point 1 do not improve the symptom, change Main PCB.**

OK

Check Point 3: Replace Compressor

▶ **If Check Point 2 do not improve the symptom, change Compressor.**

Trouble shooting 26 **OUTDOOR UNIT Error Method:** **Outdoor Unit Fan Motor Error**	**Indicate or Display:** **Refer to error code table.**

Detective Actuators:	**Detective details:**
Outdoor unit Main PCB Outdoor unit fan motor	① When outdoor fan rotation speed is less than 100rpm in 20 seconds after fan motor starts, fan motor stops. ② After fan motor restarts, if the same operation within 60sec is repeated 3 times in a row, compressor and fan motor stops. ③ If ① and ②repeats 5 times in a row, compressor and fan motor stops permanently.

Forecast of Cause:

1. Fan rotation failure 2. Motor protection by surrounding temperature rise 3. Main PCB failure
4. Outdoor unit fan motor failure

Check Point 1 : Check rotation of Fan

・Rotate the fan by hand when operation is off.
(Check if fan is caught, dropped off or locked motor)
>>If Fan or Bearing is abnormal, replace it.

OK

Check Point 2 : Check ambient temp. around motor

・Check excessively high temperature around the motor.
(If there is any surrounding equipment that causes heat)
>>Upon the temperature coming down, restart operation.

OK

Check Point 3 : Check Outdoor unit fan motor

・Check Outdoor unit fan motor. **(PARTS INFORMATION 5)**
>>If Outdoor Fan Motor is abnormal, replace Outdoor fan motor and Main PCB.

OK

Check Point 4 : Check Output Voltage of Main PCB

・Check outdoor unit circuit diagram and the voltage. (Measure at Main PCB side connector)

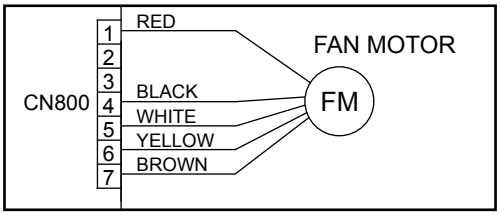

Read wire	DC voltage
Red - Black	300 - 400V
White - Black	15±1.5V

▶ **If the voltage is not correct, replace Main PCB.**

Trouble shooting 27 **OUTDOOR UNIT Error Method:** **4-Way Valve Error**	**Indicate or Display:** **Refer to error code table.**

Detective Actuators:	**Detective details:**
Indoor unit Controller PCB Heat exchanger temperature thermistor Room temperature thermistor 4-way valve	When the indoor heat exchanger temperature is compared with the room temperature, and either following condition is detected continuously two times, the compressor stops. ・Cooling or Dry operation [Indoor heat exchanger temp.] - [Room temp.] > 10°C ・Heating operation [indoor heat exchanger temp.] - [Room temp.] < -10°C If the same operation is repeated 5 times, the compressor stops permanently.

Forecast of Cause :

1. Connector connection failure 2. Thermistor failure 3. Coil failure 4. 4-way valve failure
5. Main PCB failure 6. Controller PCB failure

Check Point 1 : Check connection of Connector

・Check if connector is removed.
・Check erroneous connection.
・Check if thermistor cable is open.
>> Upon correcting the removed connector or mis-wiring, reset the power.

OK

Check Point 2 : Check thermistor of Indoor unit

・Isn't it fallen off the holder?
・Is there a cable pinched?
>> Check characteristics of thermistor, (Refer to Trouble shooting 7,8), If defective, replace the thermistor.

OK

Check Point 3 : Check the solenoid coil and 4-way valve

[Solenoid coil]
・Remove CN30 from PCB and check the resistance value of coil.
Resistance value is about 1.4kΩ
>> If it is Open or abnormal resistance value, replace Solenoid Coil.

[4-way valve]
・Check each piping temperature,
and the location of the valve by the temperature difference.
>> If the value location is not proper, replace 4-way valve.

OK

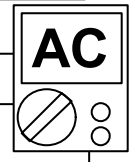

Check Point 4 : Check the voltage of 4-way valve

・Check the CN 30 voltage of Main PCB
Check if AC198V(AC220V-10%) - 264V(AC240V+10%) appears at CN 30 of Main PCB.
[Heating operation]
>> If it is not voltage, Replace Main PCB.
[Cooling operation]
>> If it is voltage, Replace Main PCB.

OK

Check Point 5 : Replace Controller PCB

▶ **If Check Point 1- 4 do not improve the symptom, replace Controller PCB of Indoor unit .**

Trouble shooting 28 **OUTDOOR UNIT Error Method:** **Discharge Temp. Error**	**Indicate or Display:** **Refer to error code table.**

Detective Actuators:	**Detective details:**
Outdoor unit Main PCB Discharge temperature thermistor	"Protection stop by "discharge temperature ≧ 110°C during compressor operation"" generated 2 times within 24 hours.

Forecast of Cause :
1. 3-way valve not opened
2. EEV defective, strainer clogged
3. Outdoor unit operation failure, foreign matter on heat exchanger
4. Discharge temperature thermistor failure
5. Insufficient refrigerant
6. Main PCB failure

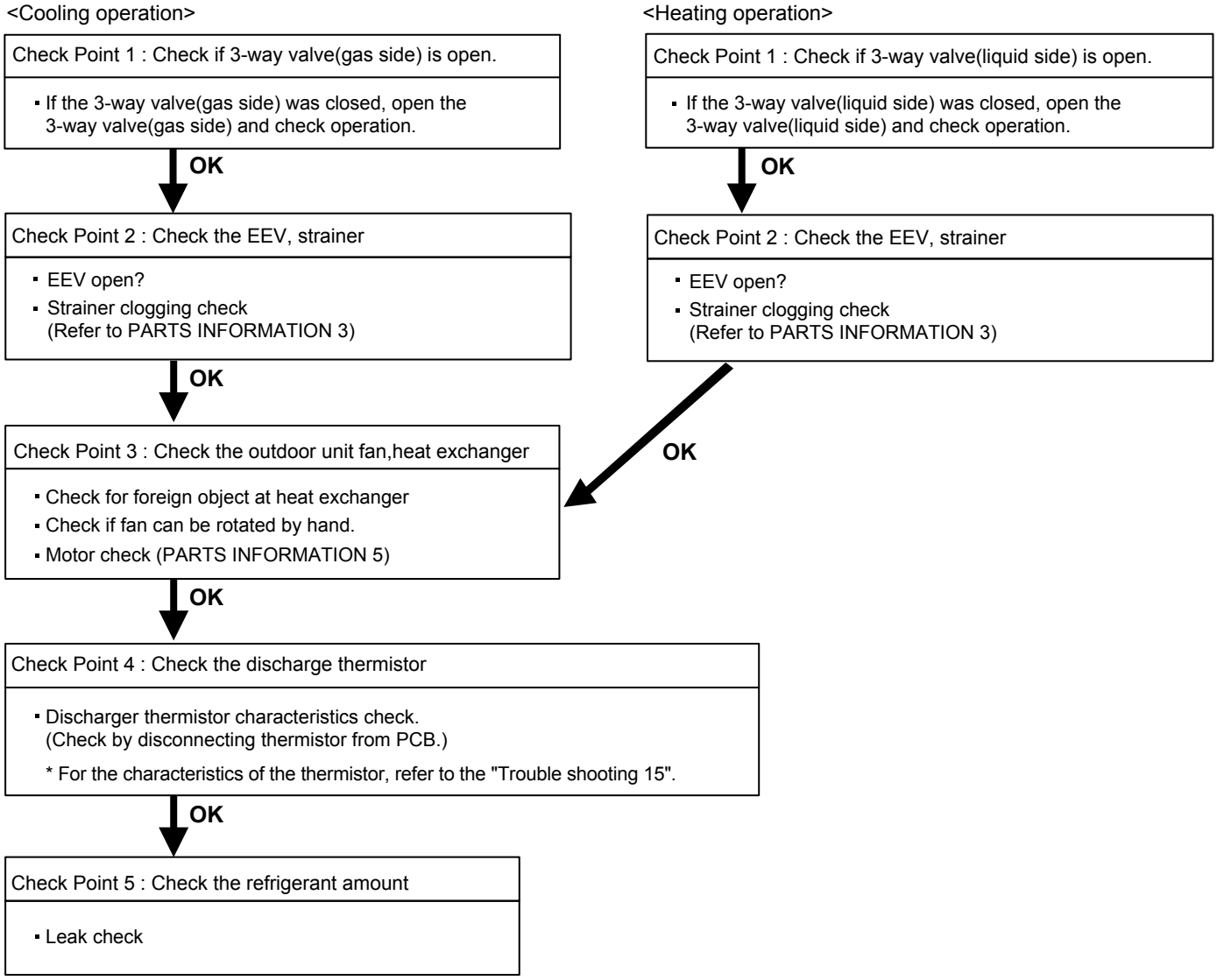

Trouble shooting 29 **OUTDOOR UNIT Error Method:** **Compressor Temp. Error**	**Indicate or Display:** **Refer to error code table.**

Detective Actuators:	**Detective details:**
Compressor temperature thermistor	"Protection stop by "compressor temperature ≧ 110°C during compressor operation"" generated 2 times within 24 hours.

Forecast of Cause :
1. 3-way valve not opened
2. EEV defective, strainer clogged
3. Outdoor unit operation failure, foreign matter on heat exchanger
4. Compressor temperature thermistor failure
5. Insufficient refrigerant
6. Main PCB failure

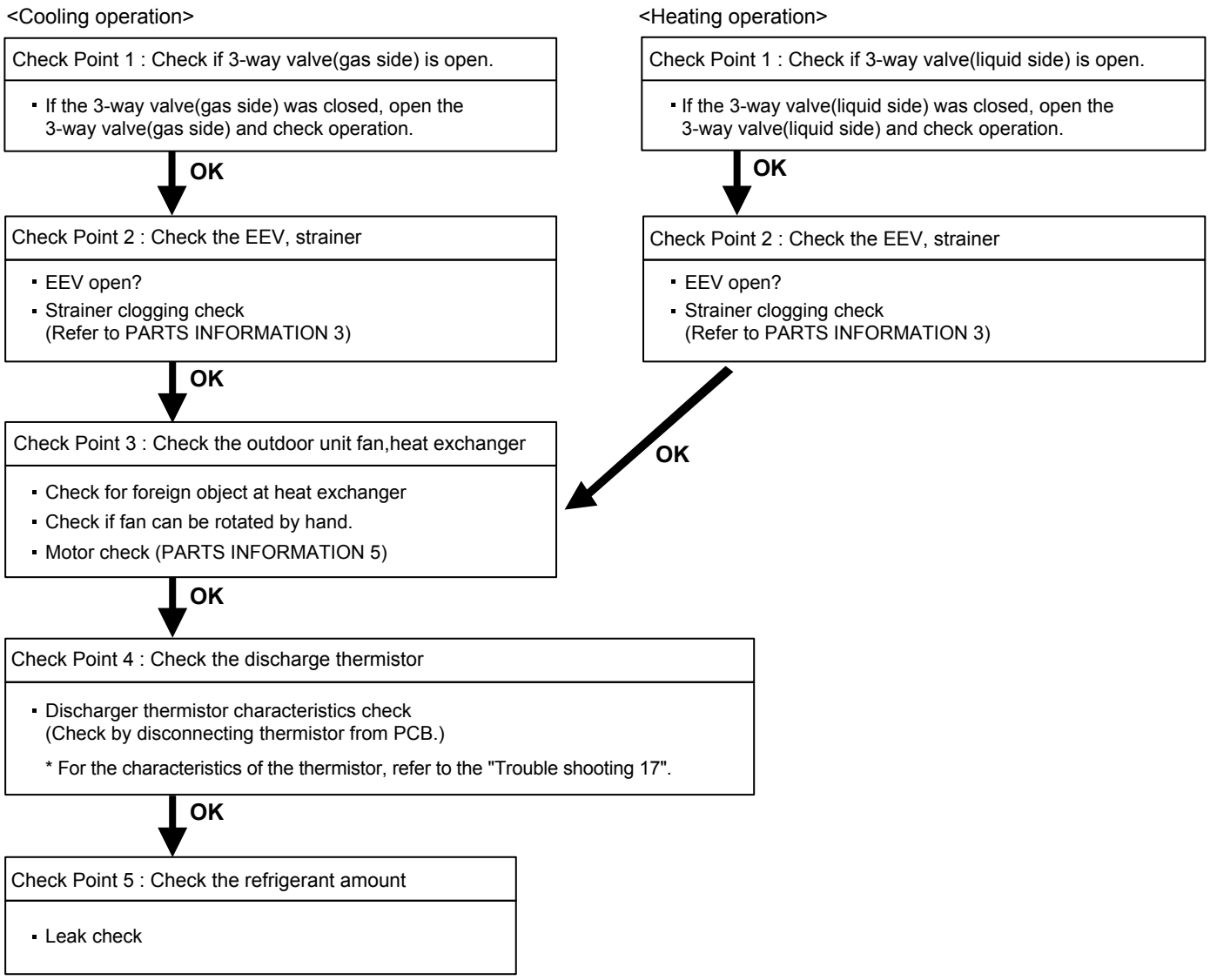

2-3 TROUBLE SHOOTING WITH NO ERROR CODE

Trouble shooting 30

Indoor Unit - No Power

Forecast of Cause:

1. Power Supply failure 2. External cause
3. Electrical Components defective

Check Point 1 : Check Installation Condition

- Isn't the breaker down?
- Check loose or removed connection cable.

>>If abnormal condition is found, correct it by referring to Installation Manual or Data & Technical Manual.

OK

Check Point 2 : Check external cause at Indoor and Outdoor (Voltage drop or Noise)

- Instant drop ----- Check if there is a large load electric apparatus in the same circuit.
- Momentary power failure ----- Check if there is a defective contact or leak current in the power supply circuit.
- Noise ----- Check if there is any equipment causing harmonic wave near electric line. (Neon bulb or electric equipment that may cause harmonic wave) Check the complete insulation of grounding.

OK

Check Point 3 : Check Electrical Components

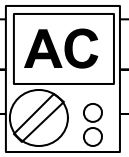

- Check Voltage of power supply.

>> Check AC198 - 264V appears at Indoor Unit Terminal 1 - 2 (Power Supply).

YES

- Check Varistor (VA1) in Controller PCB.

>> If Varistor is defective, there is a possibility of an abnormal power supply. Check the correct power supply and replace Varistor.

OK

▶ **If Check Point 1 - 3 do not improve the symptom, replace Controller PCB and Indoor Unit Terminal.**

Trouble shooting 31

Outdoor Unit - No Power

Forecast of Cause:

1. Power Supply failure 2. External cause
3. Electrical Components defective

Check Point 1 : Check Installation Condition

- Isn't the breaker down?
- Check loose or removed connection cable.

>>If abnormal condition is found, correct it by referring to Installation Manual or Data & Technical Manual.

OK

Check Point 2 : Check external cause at Indoor and Outdoor (Voltage drop or Noise)

- Instant drop ----- Check if there is a large load electric apparatus in the same circuit.
- Momentary power failure ----- Check if there is a defective contact or leak current in the power supply circuit.
- Noise ----- Check if there is any equipment causing harmonic wave near electric line.
  (Neon bulb or electric equipment that may cause harmonic wave)
  Check the complete insulation of grounding.

OK

Check Point 3 : Check Electrical Components

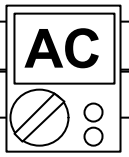

- Check the voltage of power supply.

>> Check if AC198 - 264V appears at Outdoor Unit Terminal L - N.

YES

- Check Fuse (F201) in Main PCB.

>> If Fuse is open, check loose terminal, and replace Fuse.

- Check Varistor in Main PCB (VA1, VA2).

>> If Varistor is defective, there is a possibility of an abnormal power supply. Check the correct power supply and replace Varistor. Upon checking the normal power supply, replace Varistor.

YES

▶ **If Check Point 1- 3 do not improve the symptom, replace Main PCB.**

Trouble shooting 32

No Operation (Power is ON)

Forecast of Cause:

1. Setting/ Connection failure 2. External cause
3. Electrical Component defective

Check Point 1 : Check indoor and outdoor installation condition

- Indoor Unit - Check incorrect wiring between Indoor Unit - Remote Control.
  Or, check if there is an open cable connection.
- Are these Indoor unit, Outdoor unit, and Remote control suitable model numbers to connect?

>> If there is some abnormal condition, correct it by referring to Installation manual and Data & Technical Manual.

OK

Turn off Power and check/ correct followings.

- Is there loose or removed communication line of Indoor unit and Outdoor unit?

OK

Check Point 2 : Check external cause at Indoor and Outdoor (Voltage drop or Noise)

- Instant drop ----- Check if there is a large load electric apparatus in the same circuit.
- Momentary power failure ----- Check if there is a defective contact or leak current in the power supply circuit.
- Noise ----- Check if there is any equipment causing harmonic wave near electric line.
  (Neon bulb or electric equipment that may cause harmonic wave)
  Check the complete insulation of grounding.

OK

Check Point 3 : Check Wired Remote Controller and Controller PCB

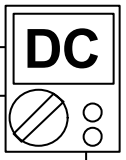

- Check Voltage at terminal 1-3 of Controller PCB or Communication PCB.
  (Power supply to Remote Control)
  Cassette, Duct Type : CN14
  Wall mount, Floor Type : CN6
  Conpact Wall mount Type : CN305(UTY-XCBXZ1)

>> If it is DC12V, Remote Control is failure. (Controller PCB is normal) >> Replace Remote Control
>> If it is DC 0V, Controller PCB is failure. (Check Remote Control once again)
>> Check Indoor unit fan motor. (PARTS INFORMATION 4)
If it is normal, replace Controller PCB.
If it is abnormal, replace Indoor unit fan motor and Controller PCB.

>> If the symptom does not change by above Check 1, 2, 3, replace Main PCB of Outdoor unit.

Trouble shooting 33

No Cooling / No Heating

Forecast of Cause:

1. Indoor Unit error 2. Outdoor Unit error
3. Effect by Surrounding environment
4. Connection Pipe / Connection Wire failure 5. Refrigeration cycle failure

Check Point 1 : Check Indoor Unit

- Does Indoor unit FAN run on HIGH FAN?
- Is Air filter dirty?
- Is Heat exchanger clogged?
- Check if Energy save function is operated.

OK

Check Point 2 : Check Outdoor Unit Operation

- Check if Outdoor unit is operating
- Check any objects that obstruct the air flow route.
- Check clogged Heat exchanger.
- Is the Valve open?

OK

Check Point 3 : Check Site Condition

- Is capacity of Indoor unit fitted to Room size?
- Any windows open? Or direct sunlight ?

OK

Check Point 4 : Check Indoor/ Outdoor Installation Condition

- Check connection pipe (specified pipe length & Pipe diameter?)
- Check any loose or removed communication line.

>> If there is an abnormal condition, correct it by referring to Installation Manual or Data & Technical Manual.

OK

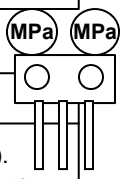

Check Point 5 : Check Refrigeration Cycle

- Check if Strainer is clogged (Refer to the figure at right).
- Measure Gas Pressure and if there is a leakage, correct it.

>> When recharging the refrigerant, make sure to perform vacuuming, and recharge the specified amount.

- Check EEV (PARTS INFORMATION 3)
- Check Compressor (PARTS INFORMATION 1,2)

Attention

Strainer normally does not have temperature difference between inlet and outlet as shown in① , but if there is a difference like shown in② , there is a possibility of inside clogged. In this case, replace Strainer.

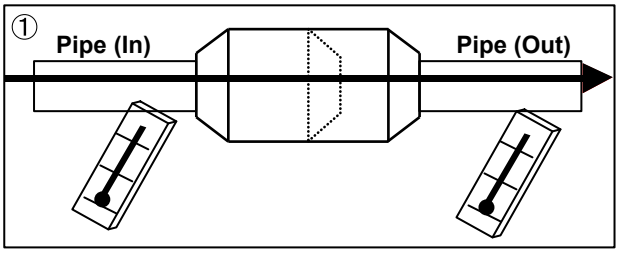

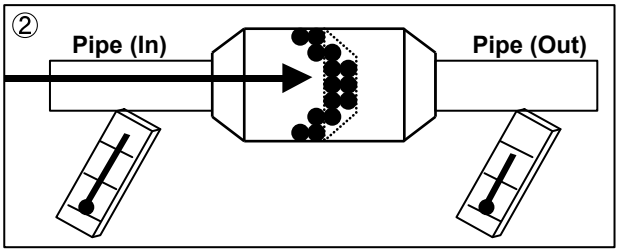

Trouble shooting 34

Abnormal Noise

Forecast of Cause :

1. Abnormal installation (Indoor/ Outdoor)
2. Fan failure (Indoor/ Outdoor)
3. Compressor failure (Outdoor)

Diagnosis method when Abnormal Noise is occurred

- Abnormal noise is coming from Indoor unit. (Check and correct followings)

- Is Main Unit installed in stable condition?
- Is the installation of Air suction grille and front panel normal?

OK

- Is Fan broken or deformed?
- Is the screw of Fan loose?
- Is there any object which obstruct the Fan rotation?

- Abnormal noise is coming from Outdoor unit. (Check and correct followings)

- Is Main Unit installed in stable condition?
- Is Fan Guard installed normally?

OK

- Is Fan broken or deformed?
- Is the screw of Fan loose?
- Is there any object which obstruct the Fan rotation?

OK

- Check if vibration noise by loose bolt or contact noise of piping is happening.

OK

- Is Compressor locked?
  >> Check Compressor (PARTS INFORMATION 1,2)

Trouble shooting 35

Water Leaking

Forecast of Cause:

1. Erroneous installation 2. Drain hose failure

Diagnosis method when water leak occurs

- Is Main unit installed in stable condition?
- Is Main unit broken or deformed at the time of transportation or maintenance?

OK

- Is Drain hose connection loose?
- Is there a trap in Drain hose?
- Is Drain Hose clogged?

OK

- Is Fan rotating?
  >> Check Fan Motor

Diagnosis method when water is spitting out.

- Is the filter clogged?

OK

- Check Gas pressure and correct it if there was a gas leak.

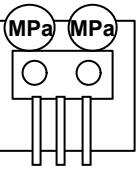

2-4 SERVICE PARTS INFORMATION

SERVICE PARTS INFORMATION 1

Compressor

Diagnosis method of Compressor (If Outdoor Unit LED displays Error, refer to Trouble shooting)

Does not start up

- Is there open or loose connection cable?
- Check Main PCB, connection of Compressor,and winding resistance. (Refer to the next page).

>> If there is no failure, the defect of Compressor is considered (Locked compressor due to clogged dirt or less oil)

Replace Compressor

Stops soon after starting up

- Is there open or loose connection cable?
- Is Gas Pipe Valve open? (Low Pressure is too low)
- Check if Refrigerant is leaking. (Recharge Refrigerant)

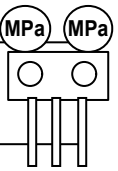

- Check if Strainer is clogged. (PARTS INFORMATION 3)
- Check Main PCB, connection of Compressor,and winding resistance. (Refer to the next page).

>> If there is no failure, the defect of Compressor can be considered. (Compression part broken or valve defective.)

Replace Compressor

Abnormal noise

- Check if vibration noise by loose bolt or contact noise of piping is happening.

▶Defective Compressor can be considered. (due to inside dirt clogging or broken component)

Replace Compressor

SERVICE PARTS INFORMATION 2

Inverter Compressor

Check Point 1 : Check Connection

・Check terminal connection of Compressor
(loose or incorrect wiring)

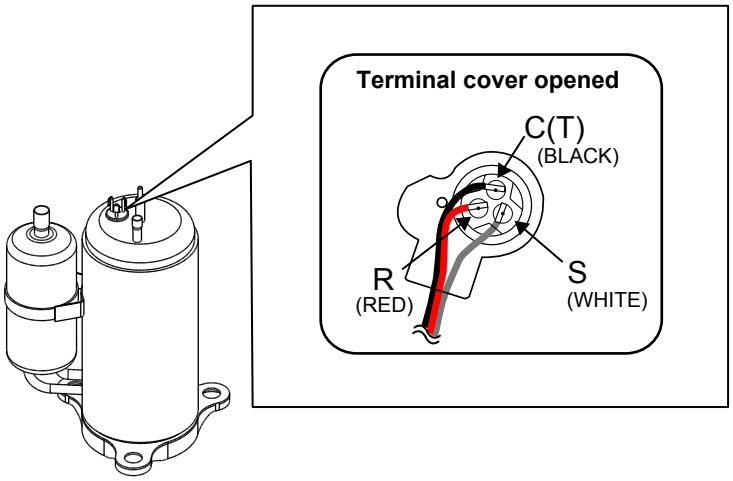

Check Point 2 : Check Winding Resistance

・Check winding resistance of each terminal
▶**If the resistance value is 0Ω or infinite, replace Compressor.**

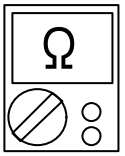

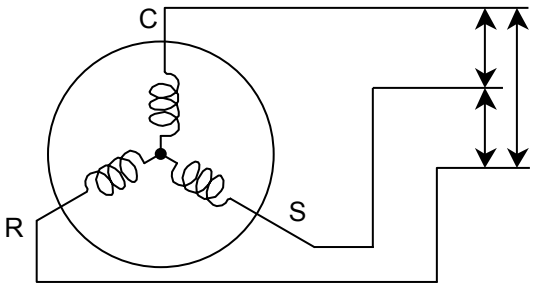

Resistance Value : 0.668Ω
(at 25°C)

Check Point 3 : Replace Inverter PCB

▶**If the symptom does not change with above Check 1, 2, replace Main PCB.**

SERVICE PARTS INFORMATION 3

Outdoor unit Electronic Expansion Valve
(EEV)

Check Point 1 : Check Connections

・Check connection of connector
(Loose connector or open cable)

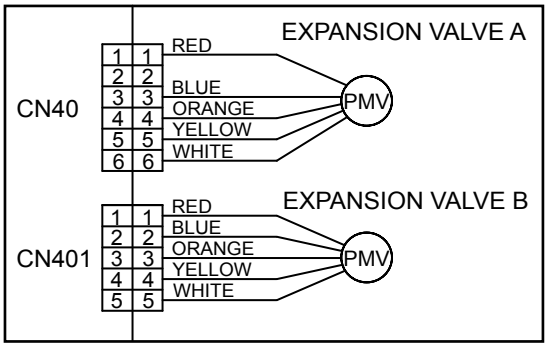

Check Point 2 : Check Coil of EEV

・Remove connector, check each winding resistance of Coil.

Read wire	Resistance value
White - Red	**46**Ω ± **4**Ω at 20°C
Yellow - Red	
Orange - Red	
Blue - Red	

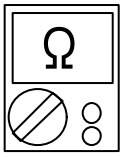

▶ **If Resistance value is abnormal, replace EEV.**

Check Point 3 : Check Voltage from Inverter PCB.

・Remove Connector and check Voltage (DC12V)

▶ **If it does not appear, replace Inverter PCB.**

Check Point 4 : Check Noise at start up

・Turn on Power and check operation noise.

▶ **If an abnormal noise does not show, replace Inverter PCB.**

Check Point 5 : Check Opening and Closing Operation of Valve

When Valve is closed,
it has a temp. difference between Inlet and Outlet.

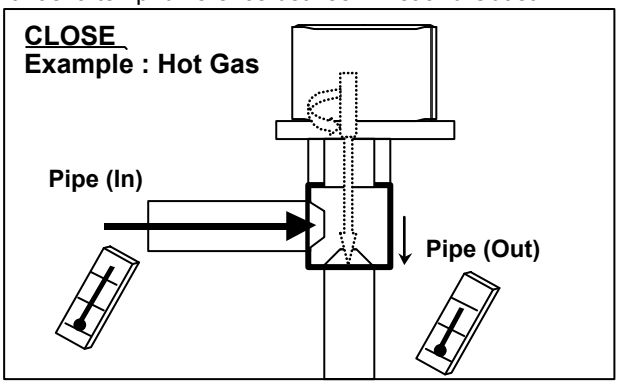

If it is open,
it has no temp. difference between Inlet and Outlet.

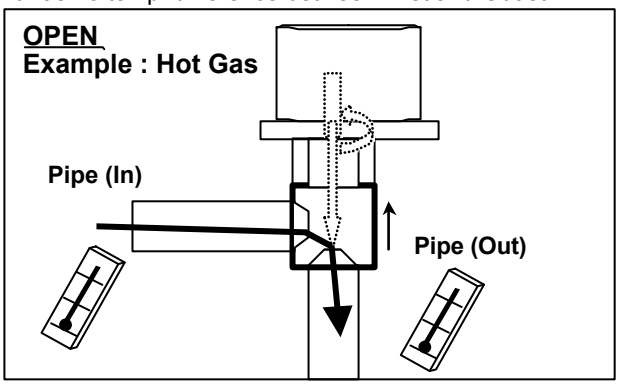

Check Point 6 : Check Strainer

Strainer normally does not have temperature difference between inlet and outlet as shown in ①,
but if there is a difference as shown in ②, there is a possibility of inside clogged. In this case, replace Strainer.

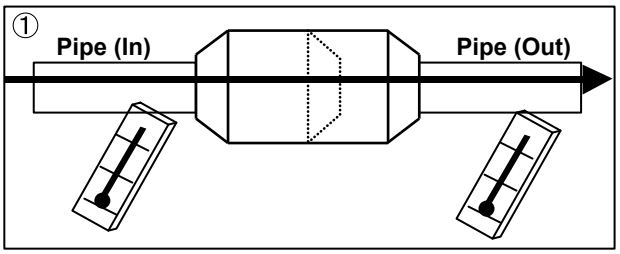

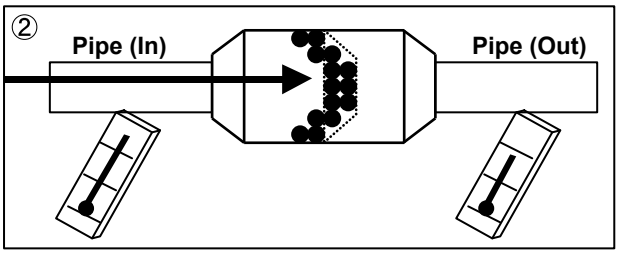

SERVICE PARTS INFORMATION 4

Indoor unit fan motor

Check Point 1 : Check rotation of Fan

・Rotate the fan by hand when operation is off.
(Check if fan is caught, dropped off or locked motor)
>>If Fan or Bearing is abnormal, replace it.

Check Point 2 : Check resistance of Indoor Fan Motor

・Refer to below. Circuit-test "Vm" and "GND" terminal.
(Vm: DC voltage, GND: Ground terminal)
>>If they are short-circuited (below 300 kΩ), replace Indoor fan motor and Controller PCB.

For Wall Mount, Conpact Wall Mount,Floor Type

Pin number (wire color)	Terminal function (symbol)
1 (Blue)	Feed back (FG)
2 (Yellow)	Speed command (Vsp)
3 (White)	Control voltage (Vcc)
4 (Black)	Ground terminal (GND)
5	No function
6 (Red)	DC voltage (Vm)

For Cassette, Duct Type

Pin number (wire color)	Terminal function (symbol)
1 (Brown)	Feed back (FG)
2 (Yellow)	Speed command (Vsp)
3 (White)	Control voltage (Vcc)
4 (Black)	Ground terminal (GND)
5	No function
6 (Red)	DC voltage (Vm)

SERVICE PARTS INFORMATION 5

Outdoor unit fan motor

Check Point 1 : Check rotation of Fan

・Rotate the fan by hand when operation is off.
(Check if fan is caught, dropped off or locked motor)
>>If Fan or Bearing is abnormal, replace it.

Check Point 2 : Check resistance of Outdoor Fan Motor

・Refer to below. Circuit-test "Vm" and "GND" terminal.
(Vm: DC voltage, GND: Ground terminal)
>>If they are short-circuited (below 300 kΩ), replace Outdoor fan motor and Main PCB.

Pin number (wire color)	Terminal function (symbol)
1 (Red)	DC voltage (Vm)
2	No function
3	No function
4 (Black)	Ground terminal (GND)
5 (White)	Control voltage (Vcc)
6 (Yellow)	Speed command (Vsp)
7 (Brown)	Feed back (FG)

Refrigerant
R410A

Wall Mounted type
INVERTER (MULTI)

3 . REPLACEMENT PARTS

3. REPLACEMENT PARTS

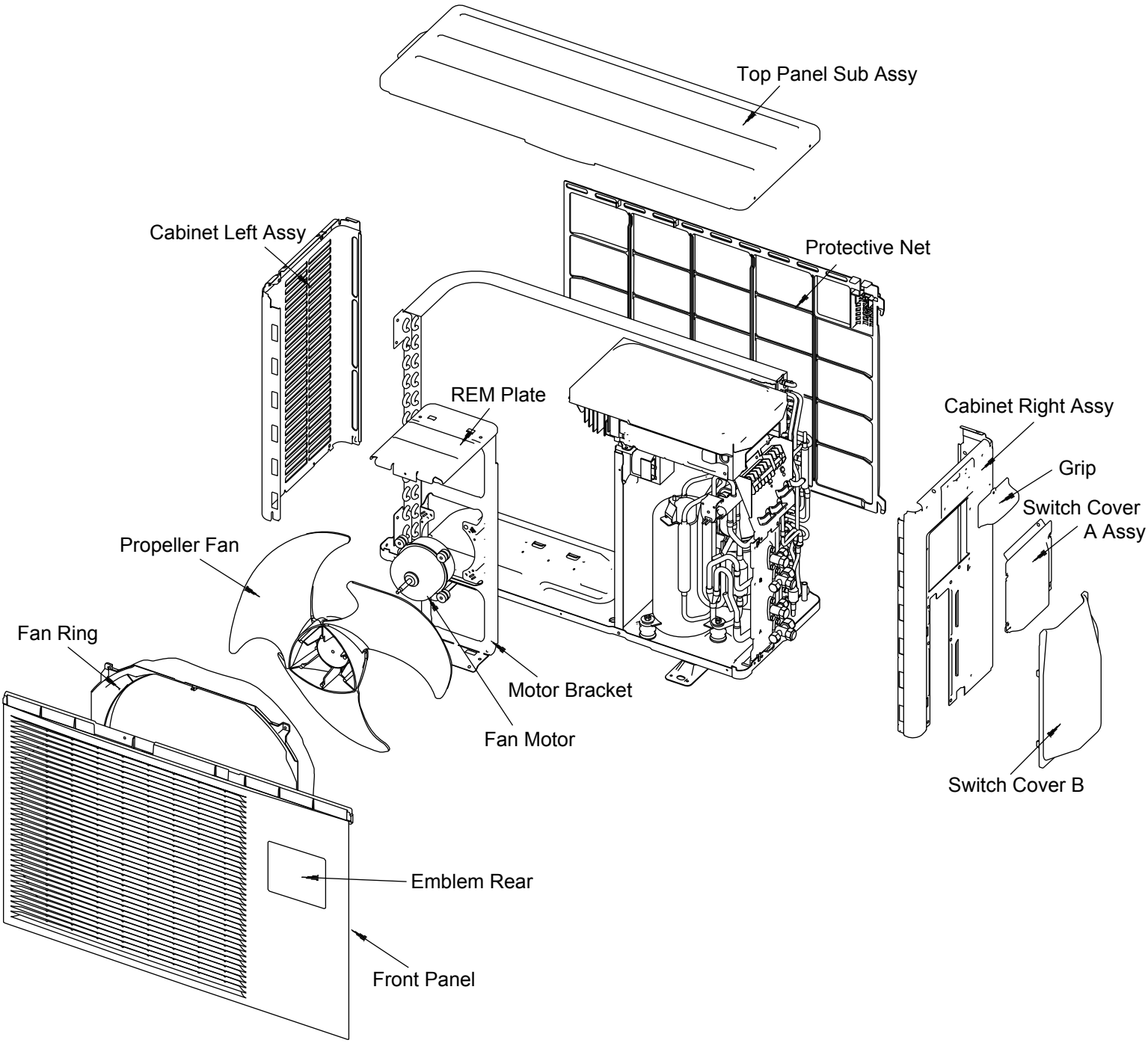

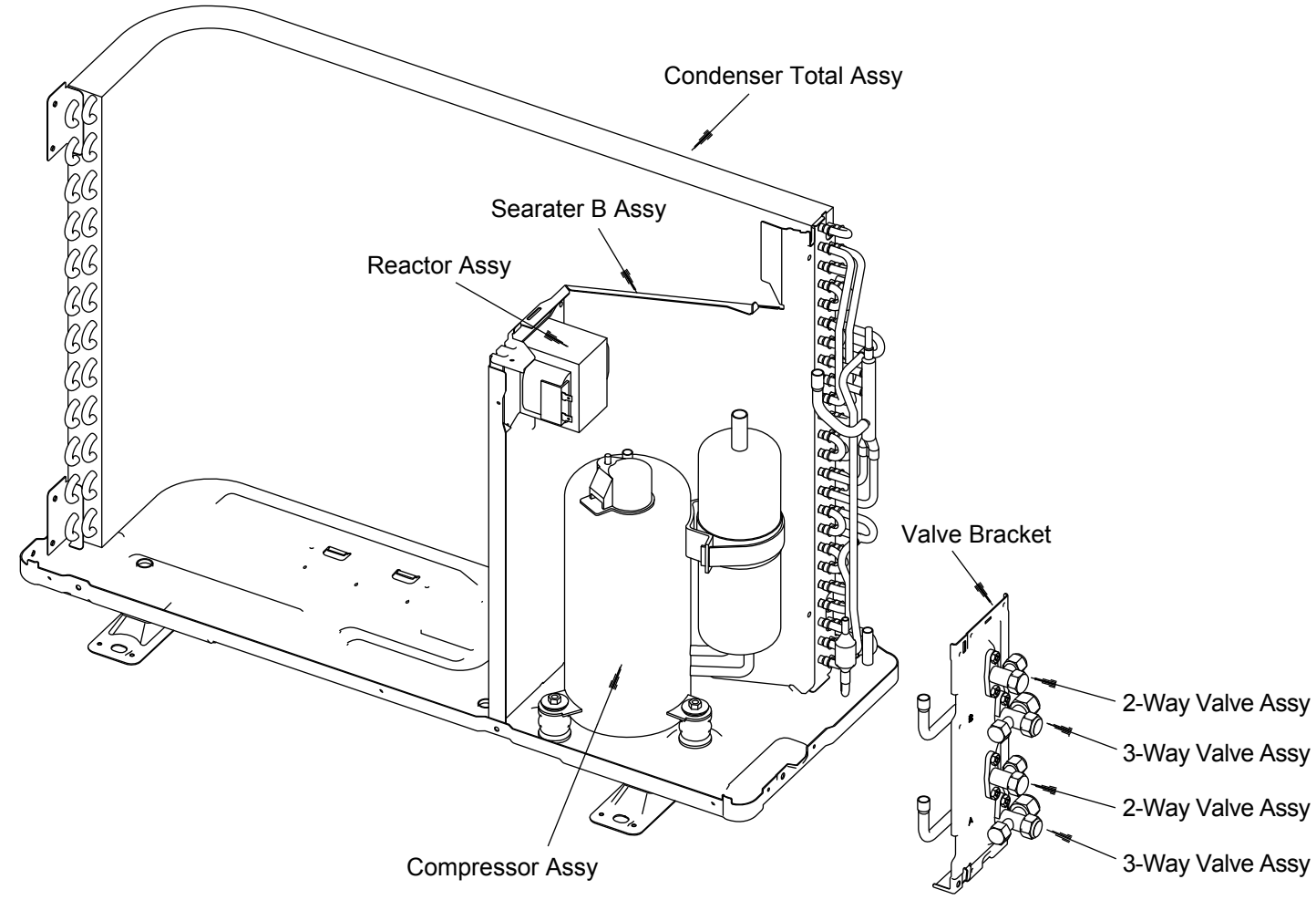
Condenser Total Assy
Searater B Assy
Reactor Assy
Valve Bracket
2-Way Valve Assy
3-Way Valve Assy
2-Way Valve Assy
3-Way Valve Assy
Compressor Assy

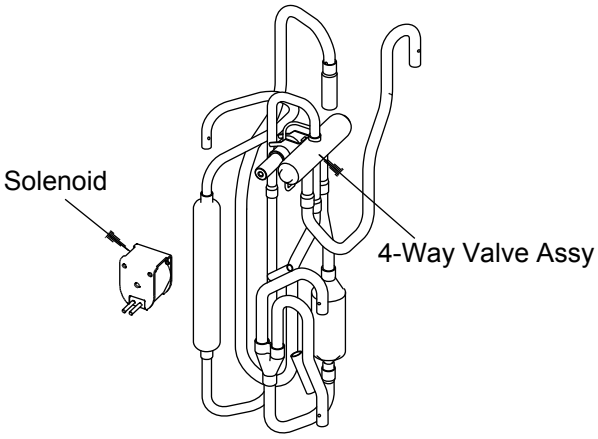
Solenoid
4-Way Valve Assy

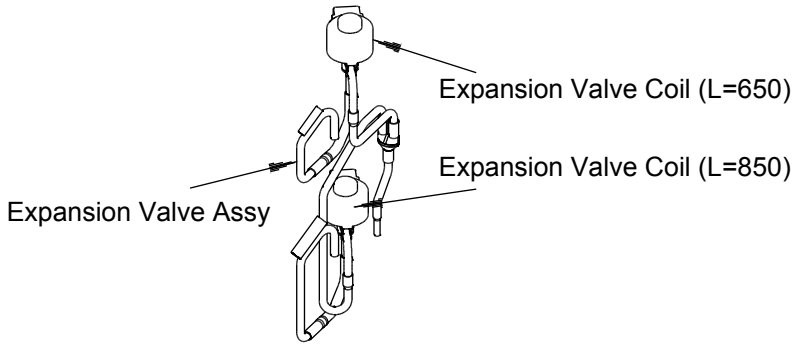
Expansion Valve Coil (L=650)
Expansion Valve Coil (L=850)
Expansion Valve Assy

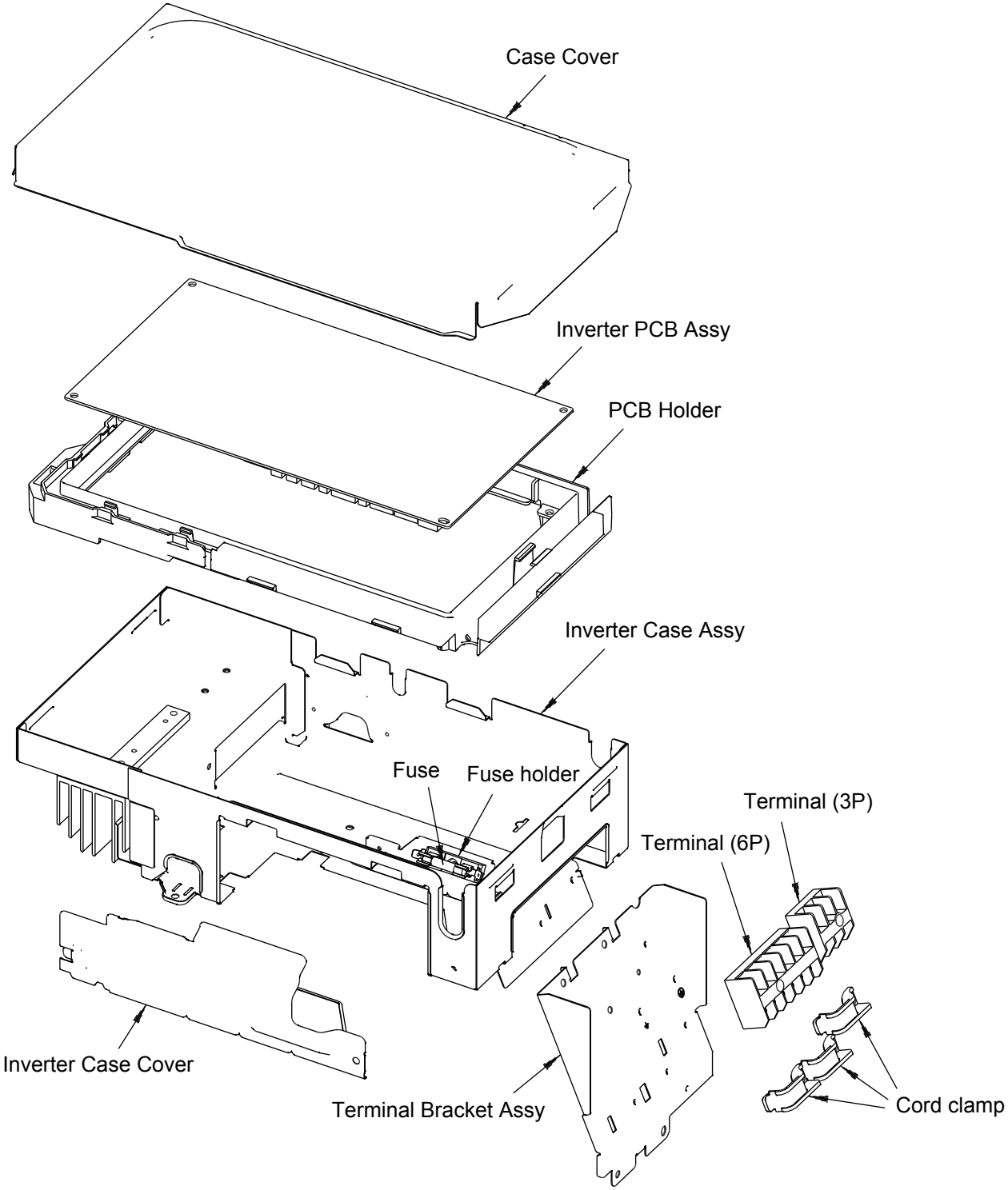
Case Cover
Inverter PCB Assy
PCB Holder
Inverter Case Assy
Fuse
Fuse holder
Terminal (3P)
Terminal (6P)
Inverter Case Cover
Terminal Bracket Assy
Cord clamp

FUJITSU

FUJITSU GENERAL LIMITED

1116,Suenaga,Takatsu-ku,Kawasaki 213-8502,Japan

Jan. 2012 Printed in Japan